EUROTECH

VACUUM TECHNOLOGIES CO., LTD.

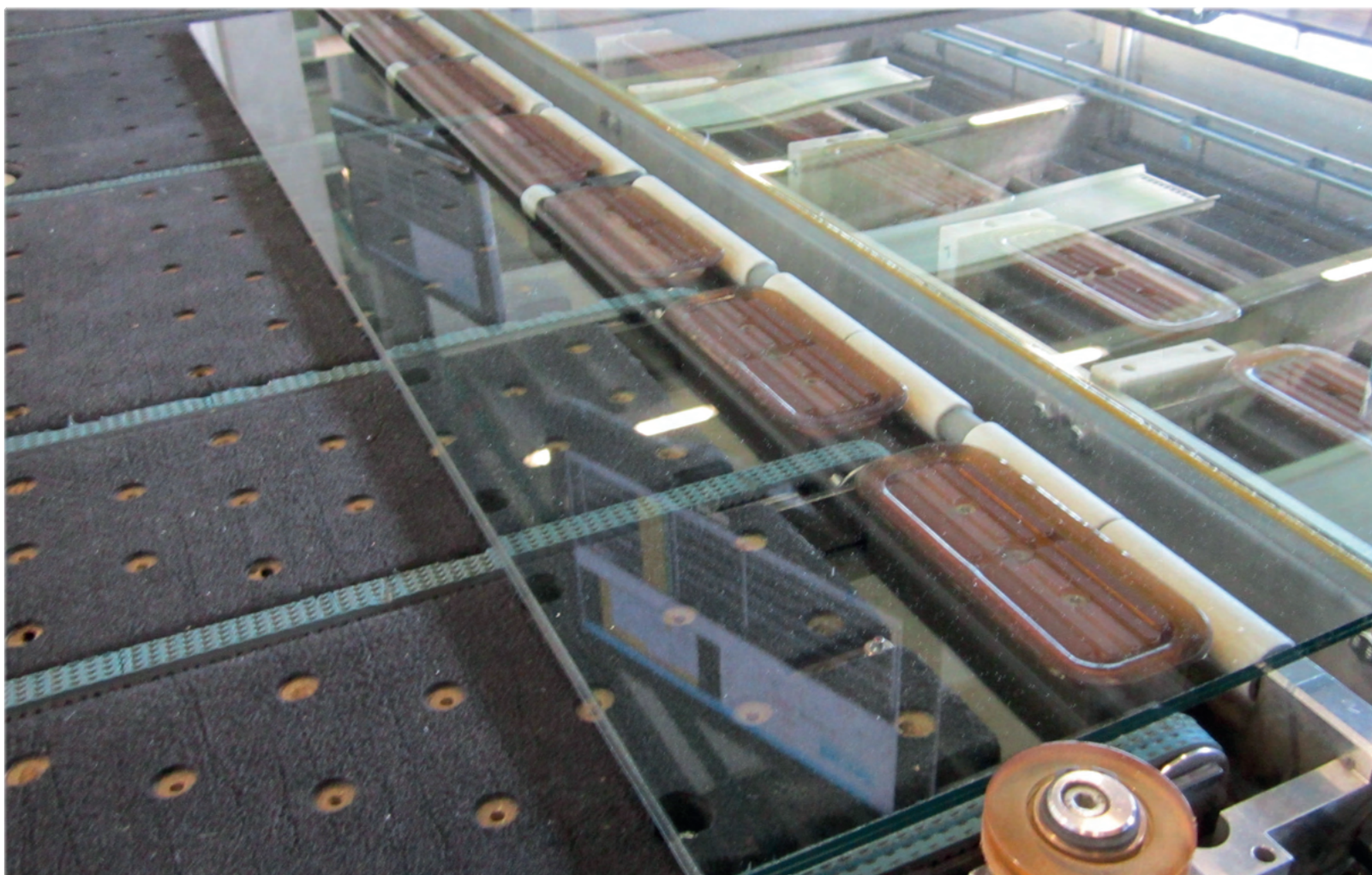

Vacuum components

Glass processing machines

Warehouse stocking systems

Vacuum lifting devices

Copyright © 2015-2016 EUROTECH

Publisher

EUROTECH
VACUUM TECHNOLOGIES CO., LTD.
Vacuum, Lifting and Transporting Techniques

178 Da-Pong Road.
Xi-tun Dist. 40754 Taichung.
Taiwan

Telephone: 886 - 4- 2297 2899
Telefax: 886 - 4- 2291 6211
E-Mail: info@eurotech-vacuum-technologies.com
Internet: http://www.eurotech-vacuum-technologies.com

Copyright

The complete content of this catalogue is subject to the copyright of EUROTECH VACCUM TECHNOLOGIES CO.,LTD. It is not allowed to use any content without the explicit allowance of this company.

Reservation

Despite of an intensive control of the content of this catalogue, EUROTECH VACUUM TECHNOLOGIES CO.,LTD. reserves alterations caused by technical conditions.

Publisher

In this machine manufacturer glass list you will find the assignment of the different machine manufacturers to our vacuum components. This is only a lead and is meant to help for searching parts in the catalogue. This machine manufacturer glass list is not a guaranteed purpose in the different machine types. For more information or questions of any kind referring to this manufacturer glass list, please contact us:
info@eurotech-vacuum-technologies.com
and give us your detailed order.

Manufacturer	Country	Page
Apb	Italy	8, 9, 13, 84
Armatec (Bystronic group)	Germany	24, 30, 31, 34, 36, 37, 41, 70, 91, 100, 110
Barbaric	Austria	26, 27, 28, 29, 37, 78, 79, 80
Bavelloni (glaston group)	Italy	60, 61
Benteler	Germany	11, 12, 25, 26, 27, 55, 57, 100, 103
Bottero	Italy	43, 84
RBB Brazzi	Italy	38
Busetti (Intermac group)	Italy	84
Bystronic	Switzerland	22, 32, 33, 46, 50, 51, 53, 86, 87, 92, 93
CMS Tecnometal	Italy	62
Coopmès	Italy	44
Elephant	Italy	38
For.El.	Italy	28, 85
Forvet	Italy	56
GK. Techniques	France	28
Grenzebach	Germany	45, 70, 71, 72, 73, 100
Hager	Germany	25, 68, 72, 73
Hegla	Germany	12, 15, 25, 29, 35, 49, 52, 98, 100, 103, 104, 111
Hova	Austria	12, 15, 98
Imai - Ormet	Italy	37

Manufacturer	Country	Page
Intermac	Italy	63, 64, 65
Janbac	France	39
Kappel	Germany	31
Lenhardt (Bystronicgruppe)	Germany	23, 48, 69, 103
Lisec	Austria	18, 19, 20, 21, 55, 82, 83, 90
Manibo	Italy	25, 26, 27, 47, 76, 77, 78, 79, 80
Mistrello	Italy	84, 94
OCS Glass	Italy	26, 27, 28, 29, 38, 44
Officine Mistrello	Italy	26, 27, 28, 29, 94
Olbricht	Germany	26, 27, 89, 100
Pannkoke	Germany	24, 29, 30, 31, 36, 37
Sapelem	France	67
Heinz Scholl	Switzerland	24, 26, 27, 31, 36, 37
Simec	Italy	18, 19, 84
Torgauer (TMB)	Germany	12, 79, 81, 98, 105
Wirth	Germany	12, 13, 25, 26, 27, 30, 36, 37
Wood´s Powr-Grip	USA	29, 40, 41

This index is only valid for the this english glass-catalogue 2015-2016. You will find the suitable vacuum components for the machine manufacturers on the listed pages.

Product description — Page

Type BSP Series SCP, rigid	8
Type BSP Series SCP, A-P	9
Type BSP Series SCP, R-K	10
Type BSP 110 R, F-V	11
Type BSP Series R, A-P	12
Type BSP Series RL, A-P	13
Type BSP Series R, R-K	14
Type BSP Series RL, R-K	15

Product picture



Product description

The suction plate Type BSP series SCP, rigid, is available in different versions and diameters. The suction plate basically consists of an aluminum base plate, a rigid installed suspension bolt which is made of a steel tube Ø 20 mm, a special chloroprene sealing ring which is bonded onto the base plate and an inner groove rubber support in the base plate.

Central vacuum feed by means of the suspension bolt. Quick and cost-saving exchange of the chloroprene sealing ring by deducting it from the base plate. This base plate is suitable perfectly for structured glass and/or surfaces.

Application picture

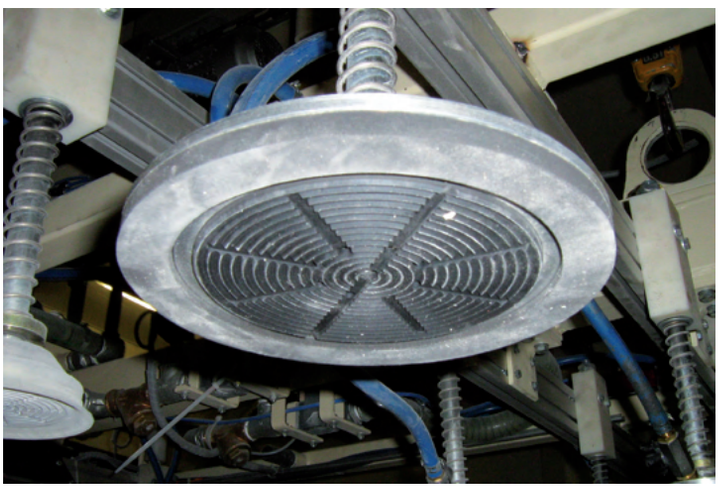

Technical drawing

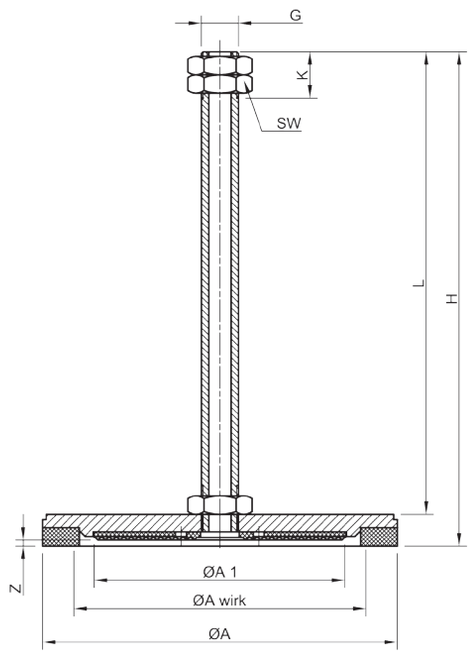

Technical data

Type	ØA	ØA wirk	ØA1	G	H	K	L	SW	Z	Weight
SCP 142	142	118	88	M 20	266	25	249	30	1,75	1,028 kg
SCP 192	192	158	136	M 20	266	25	249	30	1,75	1,424 kg
SCP 232	232	198	136	M 20	266	25	249	30	1,75	1,824 kg

Order data / Spare parts

Type	Part number Suction plate	Spare seal
SCP 142	BSP.142.232.ST.000	BSPS.10.449
SCP 192	BSP.192.232.ST.000	BSPS.10.450
SCP 232	BSP.232.232.ST.000	BSPS.10.453

Type	Carrying capacity in kg	
	vertical	horizontal
SCP 142	33	66
SCP 192	59	119
SCP 232	94	188

The information about the carrying capacity are theoretical calculated values without a safety factor. The calculation of the horizontal carrying capacity is made of the effective diameter, the low-pressure at a vacuum of 60% and the theoretical friction coefficient. * Tested and values calculated with a plane, dry and dust-free glass surface.

Product description

The suction plate Type BSP series SCP, A-P is available in different versions and diameters. The suction plate basically consists of an aluminum base plate, an articulated installed suspension bolt made of steel tube Ø 16 mm or Ø 20 mm with an hose nipple and a special chloroprene sealing ring which is bonded into the base plate with an inner groove rubber support.
Central vacuum feed by means of the suspension bolt. Quick and cost-saving exchange of the chloroprene sealing ring by deducting it from the base plate. This base plate is suitable perfectly for structured glass and/or surfaces.

Product picture



Technical drawing

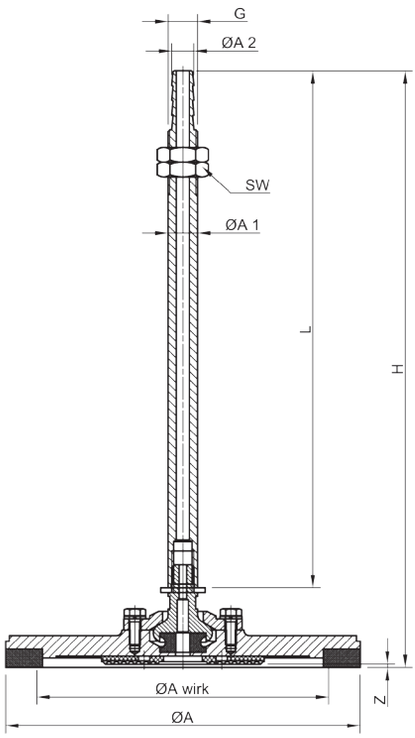

Application picture

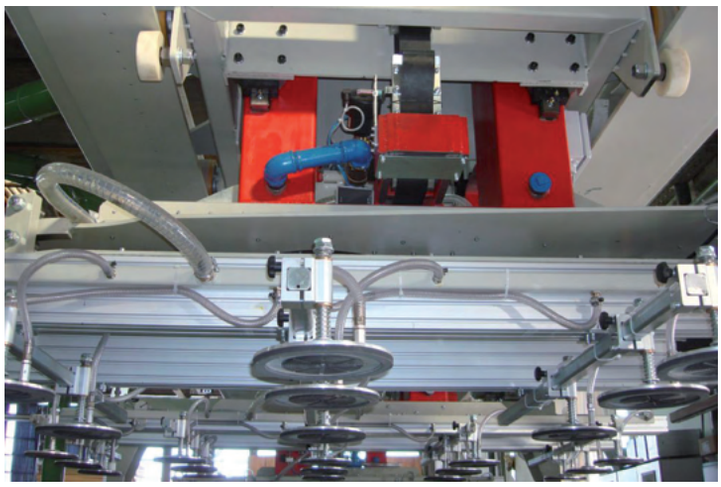

Order data / Spare parts

Technical data

Type	ØA	ØA wirk	ØA1	ØA2	G	H	L	SW	Z	Weight
SCP 142, A-P	142	118	16	12,0	M 16	323	280	24	1,75	0,904 kg
SCP 192, A-P	192	158	16	12,0	M 16	323	280	24	1,75	1,324 kg
SCP 232, A-P	232	198	20	14,5	M 20	360	300	24	1,75	2,268 kg

Type	Part number Suction plate	Spare seal
SCP 142, A-P	BSP.142.232.AP.000	BSPS.10.449
SCP 192, A-P	BSP.192.232.AP.000	BSPS.10.450
SCP 232, A-P	BSP.232.232.AP.000	BSPS.10.453

Type	Carrying capacity in kg	
	vertical	horizontal
SCP 142, A-P	33	66
SCP 192, A-P	59	119
SCP 232, A-P	94	188

The information about the carrying capacity are theoretical calculated values without a safety factor. The calculation of the horizontal carrying capacity is made of the effective diameter, the low-pressure at a vacuum of 60% and the theoretical friction coefficient. * Tested and values calculated with a plane, dry and dust-free glass surface.

Product picture



Product description

The suction plate Type BSP series SCP, R-K is available in different versions and diameters. The suction plate basically consists of an aluminum base plate, a vacuum connection on the side, an articulated installed suspension bolt made of steel Ø 20 mm, a special chloroprene sealing ring and an inner groove rubber support in the base plate.

Quick and cost-saving exchange of the chloroprene sealing ring by deducting it from the base plate. This base plate is suitable perfectly for structured glass and/or other surfaces.

Application picture

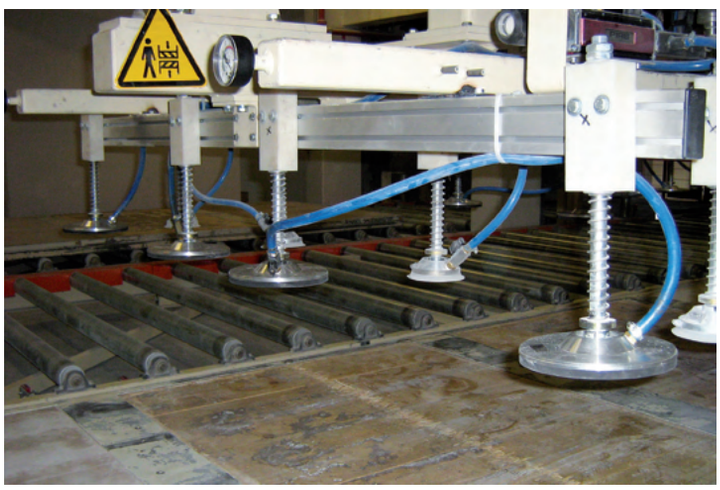

Technical drawing

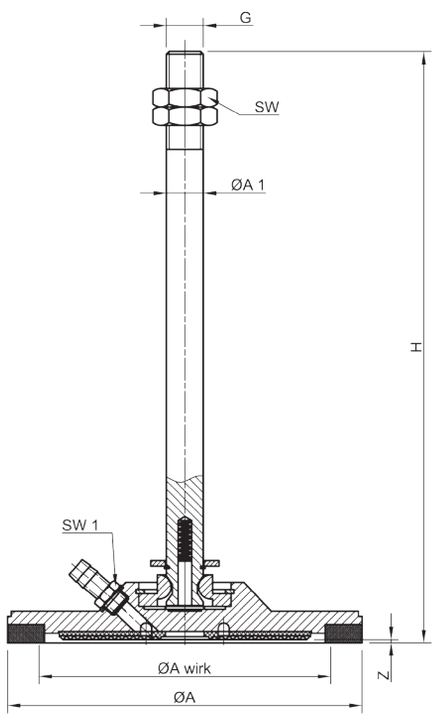

Technical data

Type	ØA	ØA wirk	ØA1	ØA2	G	H	SW	SW1	Z	Weight
SCP 142, R-K	142	118	88	20	M 20	320	30	17	1,75	1,493 kg
SCP 192, R-K	192	158	136	20	M 20	320	30	17	1,75	1,944 kg
SCP 232, R-K	232	198	136	20	M 20	320	30	17	1,75	2,338 kg

Order data / Spare parts

Type	Part number Suction plate	Spare seal
SCP 142, R-K	BSP.142.232.RK.000	BSPS.10.449
SCP 192, R-K	BSP.192.232.RK.000	BSPS.10.450
SCP 232, R-K	BSP.232.232.RK.000	BSPS.10.453

Type	Carrying capacity in kg	
	vertical	horizontal
SCP 142, R-K	33	66
SCP 192, R-K	59	119
SCP 232, R-K	94	188

The information about the carrying capacity are theoretical calculated values without a safety factor. The calculation of the horizontal carrying capacity is made of the effective diameter, the low-pressure at a vacuum of 60% and the theoretical friction coefficient. * Tested and values calculated with a plane, dry and dust-free glass surface.

Product description

The suction plate Type BSP 110 R, F-V is a Pressmaster version. The seal has a diameter of 110 mm and is in NBR black at approx. 50 Shore. A flow valve is installed in the articulation piece. Additionally there is a suspension bolt Ø 20 x 300 mm with a M20 outside thread, a PA-support 80 x 100 x 60 mm and a pressure spring.

Product picture

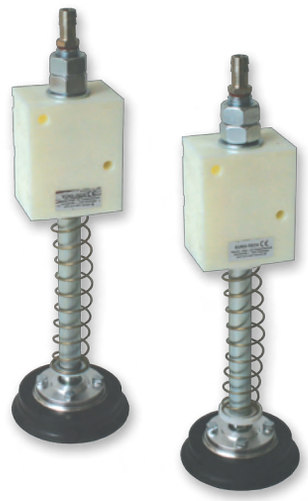

Technical drawing

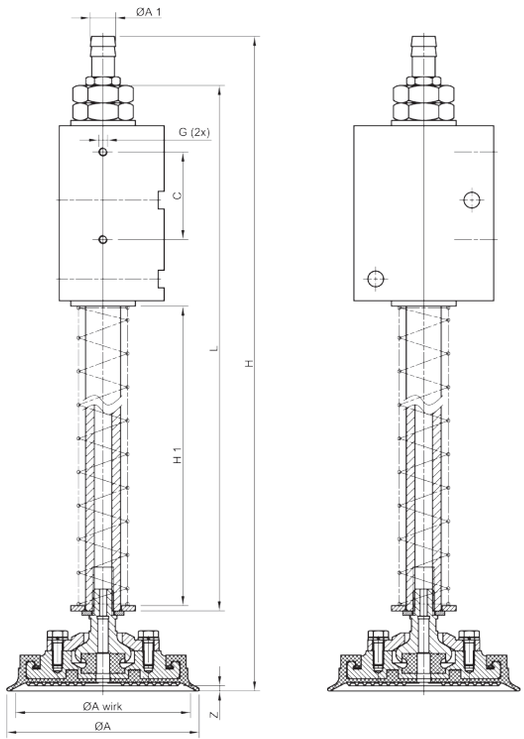

Application picture



Order data / Spare parts

Technical data

Type	ØA	ØA wirk	ØA1	H	H1	H2	C	G	Z	Weight
110 R, F-V	110	100	14,5	375	300	171	50	M5	3	1,558 kg
110 R, F-V	110	100	14,5	375	300	171	-	-	3	1,558 kg
110 R, F-V	110	100	14,5	375	300	164,5	-	-	3	1,558 kg

Type	Part number	Flat suction cup seal	Pressure spring
110 R, F-V	BSP.109.111.AP.001	BSPS.10.352 NBR black	BSPS.20.371
110 R, F-V	BSP.109.111.AP.002		
110 R, F-V	BSP.109.111.AP.003		

Type	Carrying capacity in kg	
	vertical	horizontal
110 R, F-V	24	48

The information about the carrying capacity are theoretical calculated values without a safety factor. The calculation of the horizontal carrying capacity is made of the effective diameter, the low-pressure at a vacuum of 60% and the theoretical friction coefficient. * Tested and values calculated with a plane, dry and dust-free glass surface.

Product picture



Product description

The suction plate Type BSP Series R, A-P with groove rubber support and a short rubber lip is suitable for thin materials with a smooth surface like glass or perspex sheets. The seal is in NBR black at approx. 50 Shore. The groove rubber support prevents a deformation of the material. As a result of the articulation piece between base plate and suspension bolt (10° to all sides), the base plate will adapt itself to the curvature of the thin material. Quick and cost-saving change of the seal by means of the clamping clip. Several Types of suspension bolts are available.

Application picture



Technical drawing

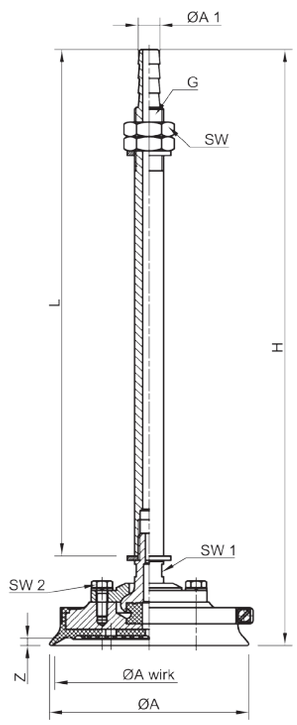

Technical data

Order data / Spare parts

Type	ØA	ØA wirk	ØF	G	H	K	L	SW1	SW2	SW3	Z	Weight
110 R, A-P	110	104	12	M16	328	67	280	24	14	10	4	0,770 kg
160 R, A-P	160	155	12	M16	328	67	280	24	14	10	4	1,140 kg
250 R, A-P	250	244	15	M20	376	90	310	30	17	13	4	2,610 kg

Type	Part number	Flat suction cup seal	Clamping clip
110 R, A-P	BSP.110.111.AP.000 NBR black	BSPS.10.001 NBR black	BSPS.11.001
160 R, A-P	BSP.160.111.AP.000 NBR black	BSPS.10.009 NBR black	BSPS.11.002
250 R, A-P	BSP.250.111.AP.000 NBR black	BSPS.10.024 NBR black	BSPS.11.003

Type	Carrying capacity in kg	
	vertical	horizontal
110 R, A-P	25	51
160 R, A-P	57	115
250 R, A-P	143	286

The information about the carrying capacity are theoretical calculated values without a safety factor. The calculation of the horizontal carrying capacity is made of the effective diameter, the low-pressure at a vacuum of 60% and the theoretical friction coefficient. * Tested and values calculated with a plane, dry and dust-free glass surface.

Product description

The suction plate Type BSP Series RL, A-P with groove rubber support and long rubber lip is suitable for thin materials with a smooth surface like glass or perspex sheets. The seal is in NBR black at approx. 50 Shore. The groove rubber support prevents a deformation of the material. As a result of the articulation piece between base plate and suspension bolt (10° to all sides), the base plate will adapt itself to the curvature of the thin material. Quick and cost-saving change of the seal by means of the clamping clip.

Product picture

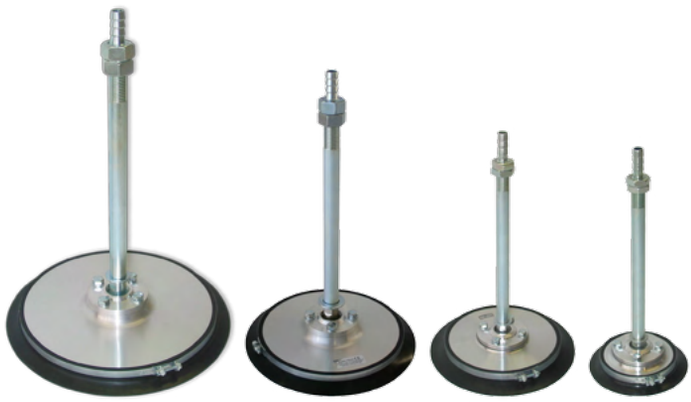

Technical drawing

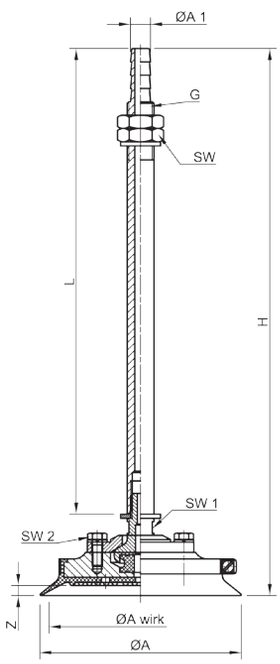

Application picture

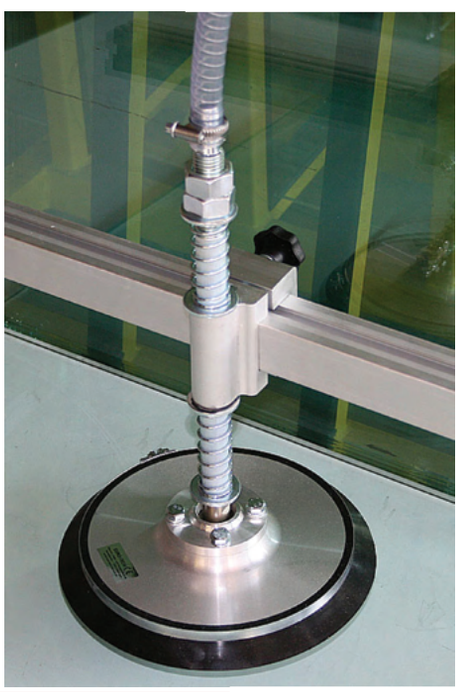

Order data / Spare parts

Technical data

Type	ØA	ØA wirk	ØF	G	H	K	L	SW1	SW2	SW3	Z	Weight
120 RL, A-P	120	110	12	M16	328	67	280	24	14	10	6	0,770 kg
180 RL, A-P	180	165	12	M16	330	67	280	24	14	10	6,5	1,170 kg
230 RL, A-P	230	220	14,6	M16	330	67	300	30	16	13	6,5	2,580 kg
270 RL. A-P	270	260	14,6	M16	378	67	300	30	16	13	4	2,670 kg

Type	Part number	Flat suction cup seal	Clamping clip
120 RL, A-P	BSP.120.111.AP.000 NBR black	BSPS.10.206 NBR black	BSPS.11.001
180 RL, A-P	BSP.180.111.AP.000 NBR black	BSPS.10.175 NBR black	BSPS.11.002
230 RL, A-P	BSP.230.111.AP.000 NBR black	BSPS.10.336 NBR black	BSPS.11.011
270 RL. A-P	BSP.270.111.AP.000 NBR black	BSPS.10.197 NBR black	BSPS.11.003

Type	Carrying capacity in kg	
	vertical	horizontal
120 RL, A-P	29	58
180 RL, A-P	65	130
230 RL, A-P	116	232
270 RL, A-P	162	324

The information about the carrying capacity are theoretical calculated values without a safety factor. The calculation of the horizontal carrying capacity is made of the effective diameter, the low-pressure at a vacuum of 60% and the theoretical friction coefficient. * Tested and values calculated with a plane, dry and dust-free glass surface.

Product picture



Product description

The suction plate Type BSP Series R, R-K with groove rubber support and short rubber lip is suitable for thin materials with a smooth surface like glass or perspex sheets. The seal is in NBR black at approx. 50 Shore. The groove rubber support prevents a deformation of the material. As a result of the articulation piece between the base plate and the suspension bolt (10° to all sides), the base plate will adapt itself to the curvature of the thin material. Quick and cost-saving exchange of the seal by means of the clamping clip.

Application picture



Technical drawing

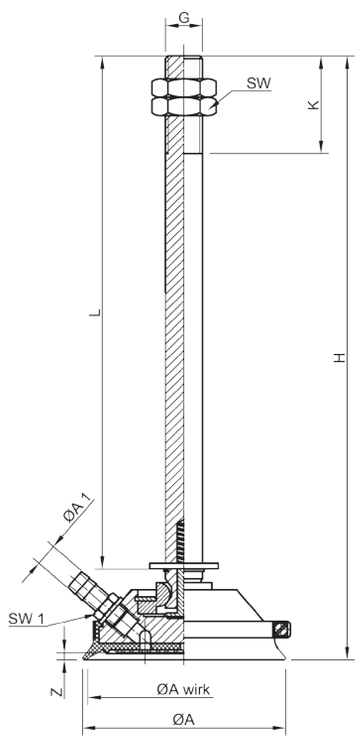

Technical data

Type	ØA	ØA wirk	ØF	G	H	K	L	SW1	SW2	Z	Weight
110 R, R-K	110	104	12	M20	330	53	280	30	14	4	1,050 kg
160 R, R-K	160	155	12	M20	330	53	280	30	14	4	1,350 kg
250 R, R-K	250	244	12	M20	330	53	280	30	14	4	3,200 kg

Order data / Spare parts

Type	Part number	Flat suction cup seal	Clamping clip
110 R, R-K	BSP.110.111.RK.000 NBR black	BSPS.10.001 NBR black	BSPS.11.001
160 R, R-K	BSP.160.111.RK.000 NBR black	BSPS.10.009 NBR black	BSPS.11.002
250 R, R-K	BSP.250.111.RK.000 NBR black	BSPS.10.024 NBR black	BSPS.11.003

Type	Carrying capacity in kg		
	vertical	horizontal	
110 R, R-K	25	51	The information about the carrying capacity are theoretical calculated values without a safety factor. The calculation of the horizontal carrying capacity is made of the effective diameter, the low-pressure at a vacuum of 60% and the theoretical friction coefficient. * Tested and values calculated with a plane, dry and dust-free glass surface.
160 R, R-K	57	115	
250 R, R-K	143	286	

Product description

The suction plate Type BSP Series RL, R-K with groove rubber support and a long rubber lip is suitable for thin materials with a smooth surface like glass or perspex sheets. The seal is in NBR black at approx. 50 Shore. As a result of the articulation piece between the base plate and suspension bolt (10° to all sides), the base plate will adapt itself to the curvature of the thin material. Quick and cost-saving exchange of the seal by means of the clamping clip.

Product picture



Technical drawing

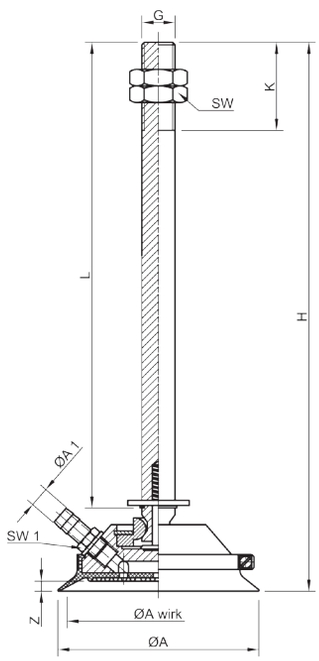

Application picture



Order data / Spare parts

Technical data

Type	ØA	ØA wirk	ØF	G	H	K	L	SW1	SW2	Z	Weight
120 RL,R-K	120	110	12	M20	330	53	280	30	14	6	1,350 kg
180 RL,R-K	180	165	12	M20	328,5	53	280	30	14	6	1,750 kg
230 RL,R-K	230	220	12	M20	330	53	280	30	14	6,5	2,300 kg
270 RL,R-K	270	260	12	M20	330	53	280	30	14	5	2,600 kg

Type	Part number	Flat suction cup seal	Clamping clip
120 RL,R-K	BSP.120.111.RK.000 NBR black	BSPS.10.206 NBR black	BSPS.11.001
180 RL,R-K	BSP.180.111.RK.000 NBR black	BSPS.10.175 NBR black	BSPS.11.002
230 RL,R-K	BSP.230.111.RK.000 NBR black	BSPS.10.336 NBR black	BSPS.11.011
270 RL,R-K	BSP.270.111.RK.000 NBR black	BSPS.10.197 NBR black	BSPS.11.003

Type	Carrying capacity in kg	
	vertical	horizontal
120 RL,R-K	29	58
180 RL,R-K	65	130
230 RL,R-K	116	232
270 RL,R-K	162	324

The information about the carrying capacity are theoretical calculated values without a safety factor. The calculation of the horizontal carrying capacity is made of the effective diameter, the low-pressure at a vacuum of 60% and the theoretical friction coefficient. * Tested and values calculated with a plane, dry and dust-free glass surface.

Product description	Page
Type BLSP 70 x 85	17
Type BLSP 68 x 168	18
Type BLSP 70 x 170	19
Type BLSP 90 x 190	20
Type BLSP 90 x 190 LS	21
Type BLSP Series BY	22
Type BLSP 42 x 60	23
Type BLSP 145 PK	24
Type BLSP Series HE	25
Type BLSP Series RL	26
Type BLSP 200 PK	30
Type BLSP 280 PK	31
Type BLSP 200 PK-BY	32
Type BLSP 280 PK-BY	33
Type BLSP 200 PK-AR	34
Type BLSP 200 RL-HE	35
Type BLSP 200 PK vulcanised	36
Type BLSP 280 PK vulcanised	37
Type BLSP 290 BR	38
Type BLSP 320 JB	39
Series BLSP RL-WPG	40
Type BLSP 300 WPG vulc.	41
Series BLSP SCP	42
Type BLSP 230 NO	43
Type BLSP 250 COP	44

Product description	Page
Type BLSP 250 NOG vulcanised	45
Rotary suc. plate BLSP 200 BY	46
Type BLSP Series L	47
Type BLSP 80 L - L	48
Type BLSP 95 R	49
Type BLSP 95 L-BY	50
Type BLSP 60 L-BY	51
Type BLSP 230 L-PU	52
Type BLSP 160 BY	53
Type BSP 200 FGS-V	54
Series BSC VAS	55
Type BSP Series FOR	56
Type BLSP 95 BE	57

Product description

The flat suction cup Type BLSP 70 x 85 have a vulcanised aluminum base plate. The seals are made of PUR brown. The inner supporting surface has a groove rubber support. The flat suction cups are predominantly used in glass cutting machines for clamping the glass plates, but they are also suitable for other fields of application. The different drilling templates serve for the connection of the base plate to the brackets of the machines.

Product picture



Technical drawing

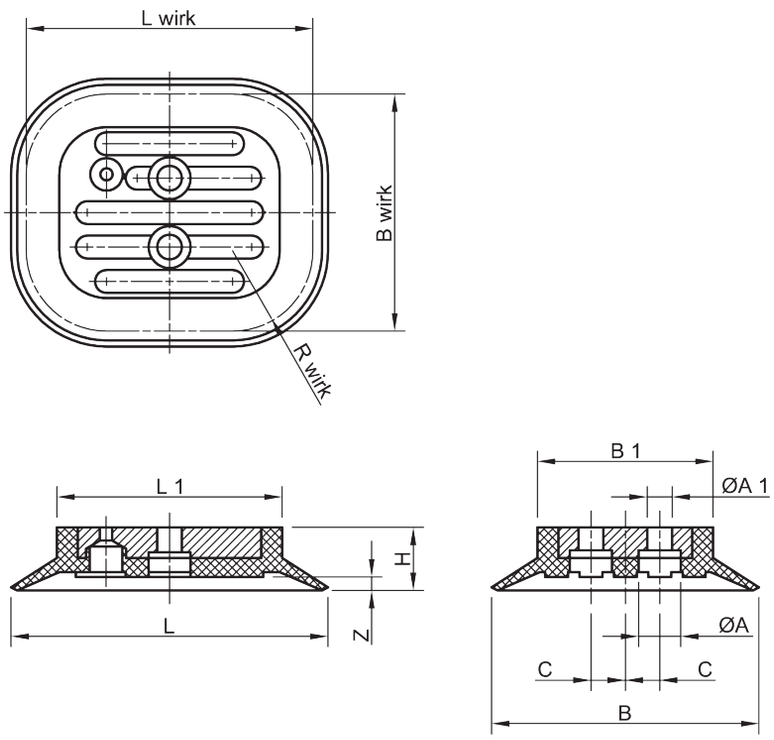

Order data / Spare parts

Technical data

Type	L	L wirk	L1	B	B wirk	B1	H	R wirk	C	ØA	ØA1	G	G1	Z
70 x 85	83	75	59	70	62	46	16,5	21	9	11,0	6,5	-	-	3,5

Type	Part number Flat suction cup		Weight
70 x 85	BLSP.070.085.128.001 PUR brown	vulcanised	0,060 kg

Type	Carrying capacity in kg	
	vertical	horizontal
70 x 85	9	19

The information about the carrying capacity are theoretical calculated values without a safety factor. The calculation of the horizontal carrying capacity is made of the effective diameter, the low-pressure at a vacuum of 60% and the theoretical friction coefficient. * Tested and values calculated with a plane, dry and dust-free glass surface.

Product picture



Product description

The flat suction cup Type BLSP 68 x 168 has a vulcanised aluminum base plate. The seal are made of PUR brown. The inner supporting surface has a groove rubber support. The flat suction cups are predominantly used in glass cutting machines for clamping the glass plates, but they are also suitable for other fields of application. The different drilling templates serve for the connection of the base plate to the brackets of the machines.

Application picture



Technical drawing

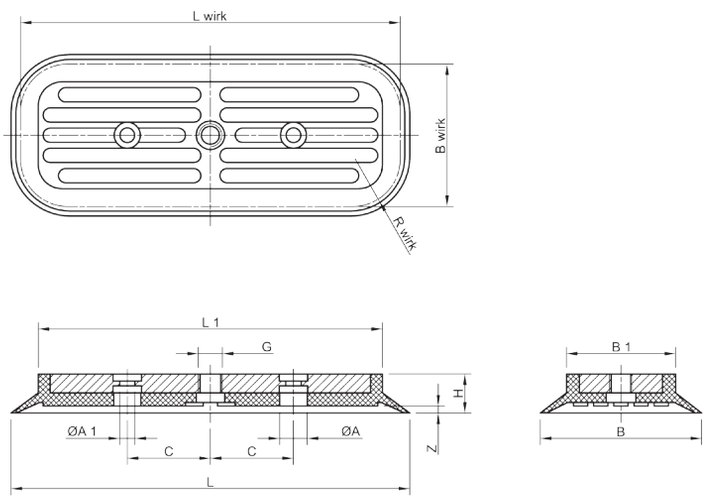

Technical data

Type	L	L wirk	L1	B	B wirk	B1	H	R wirk	C	ØA	ØA1	G	G1	Z
68 x 168	168	158	145	68	58	46	16,5	20	35	11,5	-	1/8“	-	3,0

Type	Part number Flat suction cup		Weight
68 x 168	BLSP.068.168.128.001 PUR brown	vulcanised	0,158 kg

Type	Carrying capacity in kg	
	vertical	horizontal
68 x 168	25	51

The information about the carrying capacity are theoretical calculated values without a safety factor. The calculation of the horizontal carrying capacity is made of the effective diameter, the low-pressure at a vacuum of 60% and the theoretical friction coefficient. * Tested and values calculated with a plane, dry and dust-free glass surface.

Order data / Spare parts

Product description

The flat suction cup Type BLSP 70 x 170 have a vulcanised aluminum base plate. The seals are made of PUR brown. The inner supporting surface has a groove rubber support. The flat suction cups are predominantly used in glass cutting machines for clamping the glass plates, but they are also suitable for other fields of application. The different drilling templates serve for the connection of the base plate to the brackets of the machines.

Product picture



Technical drawing

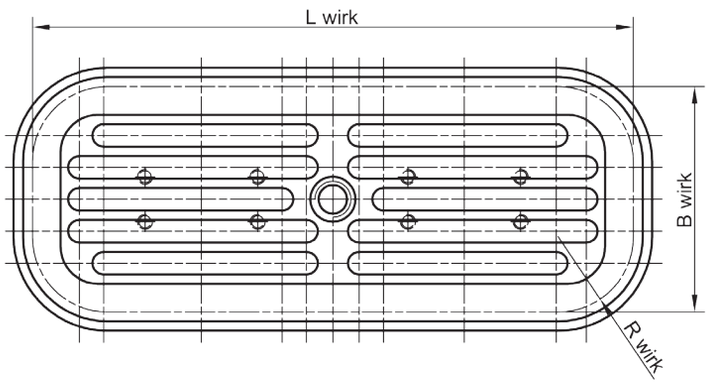

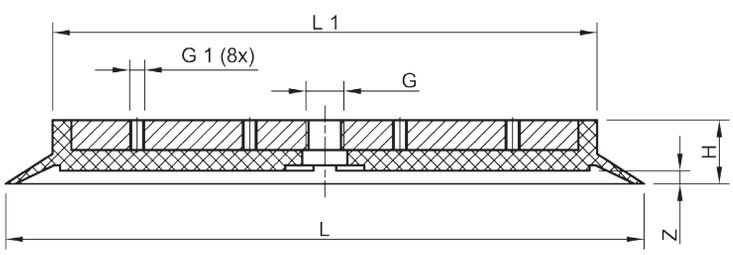

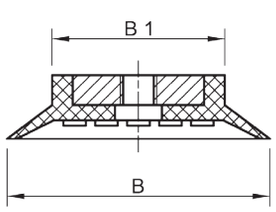

Order data / Spare parts

Technical data

Type	L	L wirk	L1	B	B wirk	B1	H	R wirk	C	ØA	ØA1	G	G1	Z
70 x 170	170	160	145	70	60	46	17,0	20	-	-	-	1/8“	8xM4	3,5

Type	Part number Flat suction cup		Weight
70 x 170	BLSP.070.170.128.002 PUR brown	vulcanised	0,166 kg

Type	Carrying capacity in kg	
	vertical	horizontal
70 x 170	25	51

The information about the carrying capacity are theoretical calculated values without a safety factor. The calculation of the horizontal carrying capacity is made of the effective diameter, the low-pressure at a vacuum of 60% and the theoretical friction coefficient. * Tested and values calculated with a plane, dry and dust-free glass surface.

Product picture



Product description

Flat suction cup Type BLSP 90x190 with vulcanized seal. The flat suction cup is in NBR black at approx. 30 Shore. Elastic and wear resistant suction cup, suitable for work pieces with a flat surface like glass plates. This suction cup is mostly used in glass machines to clamp the glass plate during the production process. The vacuum connection is centric and the flat suction cup can be mounted to the frame by using the two other holes.

Other drilling templates are available on request.

Application picture



Technical drawing

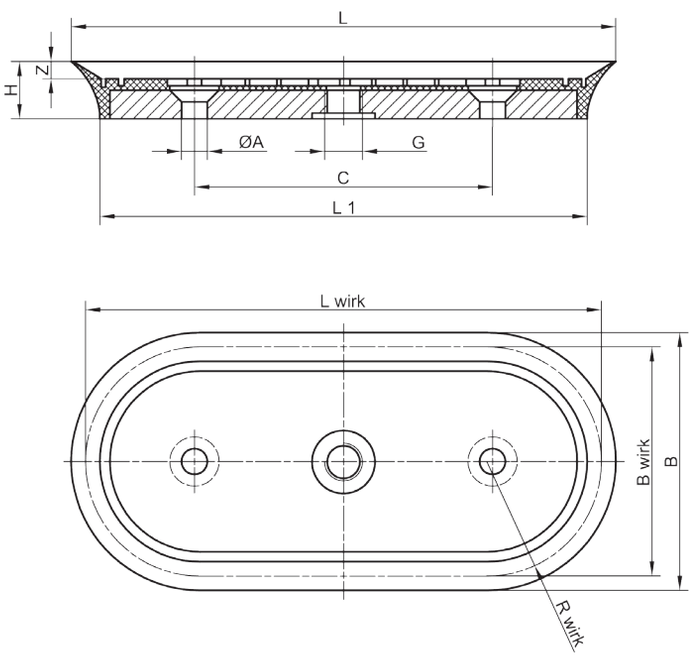

Technical data

Type	L	L wirk	L1	B	B wirk	R wirk	C	G	H	Z
BLSP 90x190	190	180	170	90	80	40	104	1/4“	20	6

Type	Part number Flat suction cup			Weight
BLSP 90x190	BLSP.090.190.111.002 NBR black		vulcanised	0,300 kg

Type	Carrying capacity in kg	
	vertical	horizontal
BLSP 90x190	28	57

The information about the carrying capacity are theoretical calculated values without a safety factor. The calculation of the horizontal carrying capacity is made of the effective diameter, the low-pressure at a vacuum of 60% and the theoretical friction coefficient. * Tested and values calculated with a plane, dry and dust-free glass surface.

Order data / Spare parts

Product description

Flat suction cup Type BLSP 90x190 LS with vulcanized seal. The flat suction cup is in NR brown at approx. 30 Shore. Elastic and wear resistant suction cup suitable for work pieces with a flat surface like glass plates. This suction cup is mostly used in glass machines to clamp the glass plate during the production process. The vacuum connection is centric and the flat suction cup can be mounted to the frame by using the two other holes.

Other drilling templates are available on request.

Product picture



Technical drawing

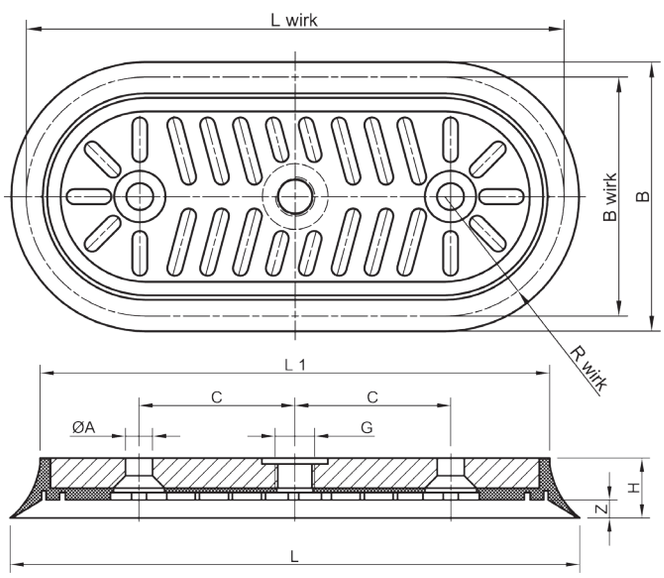

Application picture

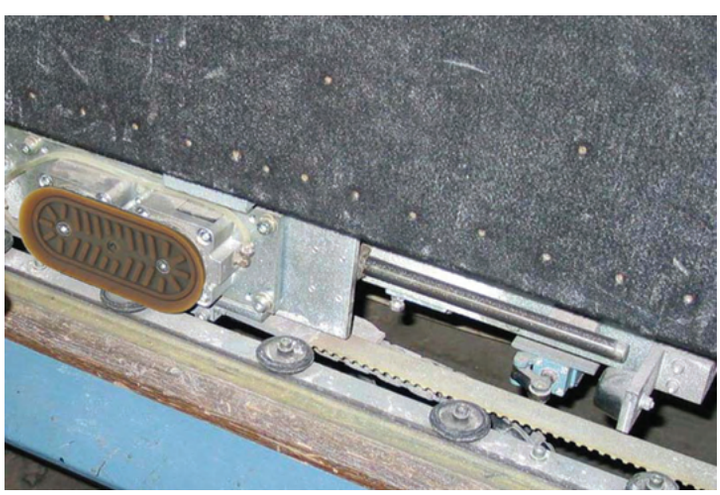

Order data / Spare parts

Type	L	L wirk	L1	B	B wirk	R wirk	ØA	G	H	Z
BLSP 90x190 LS	190	180	170	90	80	40	9	1/4“	20	6

Type	Part number Flat suction cup		Weight
BLSP 90x190 LS	BLSP.090.190.123.000 NR braun	vulcanised	0,300 kg

The information about the carrying capacity are theoretical calculated values without a safety factor. The calculation of the horizontal carrying capacity is made of the effective diameter, the low-pressure at a vacuum of 60% and the theoretical friction coefficient. * Tested and values calculated with a plane, dry and dust-free glass surface.

Technical data

Type	Carrying capacity in kg	
	vertical	horizontal
BLSP 90x190 LS	33,5	67

Product picture



Product description

The rectangular flat suction cup Type BLSP series BY has a seal in NBR grey at approx. 60 Shore and inner groove rubber support. The flat suction cup is used predominantly in VSG-Glass cutting machines for tensioning the glass plates, but can also be used in other operation fields.
The vacuum connection is in the center of the base plate. The other drillings serve for mounting the base plate to the provided bracket.

Other drilling templates are available on request.

Application picture



Technical drawing

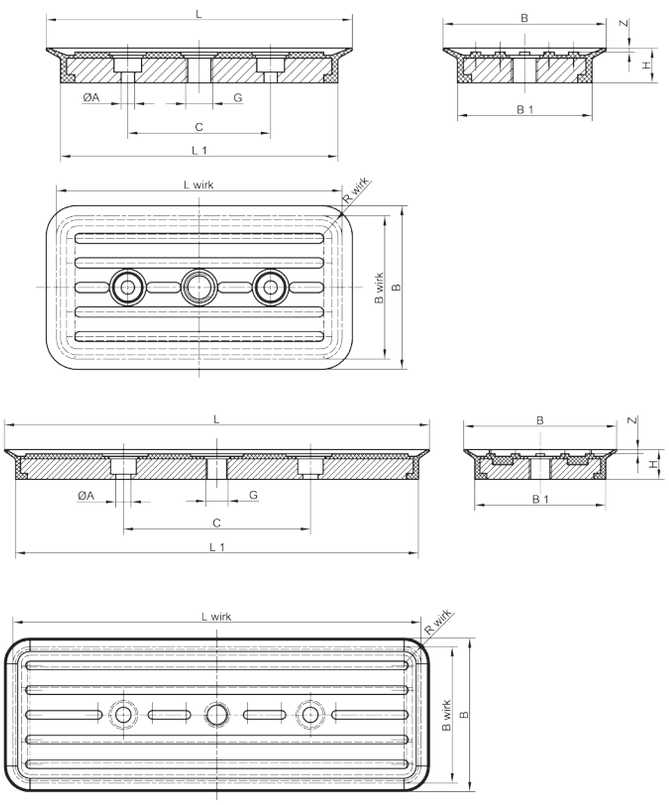

Technical data

Type	L	Lwirk	L1	B	Bwirk	B1	Rwirk	H	Z
80 x 150 BY, vulk.	150	140	136	80	70	66	10	17	2
90 x 250 BY	250	240	237	90	80	77	10	17,5	2,5

Type	Part number Flat suction cup	Flat suction cup seal	Weight
80 x 150 BY, vulk.	BLSP.080.150.121.002 NBR grey	vulcanised	0,300 kg
90 x 250 BY	BLSP.090.250.121.001 NBR grey	BSPS.10.392 NBR grey	0,570 kg

Type	Carrying capacity in kg	
	vertical	horizontal
80 x 150 BY, vulk.	29	58
90 x 250 BY	57	115

The information about the carrying capacity are theoretical calculated values without a safety factor. The calculation of the horizontal carrying capacity is made of the effective diameter, the low-pressure at a vacuum of 60% and the theoretical friction coefficient. * Tested and values calculated with a plane, dry and dust-free glass surface.

Order data / Spare parts

Product description

These vacuum clamping cup Type BLSP 42 x 60 is used in glass processing machines in order to clamp work pieces like glass plates with vacuum, for example. This special seal is in NBR grey at approx. 50 Shore, has a very short rubber lip, a nap rubber support on the surface and is vulcanized onto the base plate. The back of the base plate is already drilled and has inside threads.

Other drilling templates are available on request.

Product picture

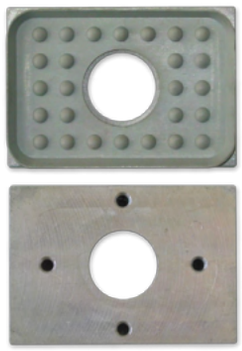

Technical drawing

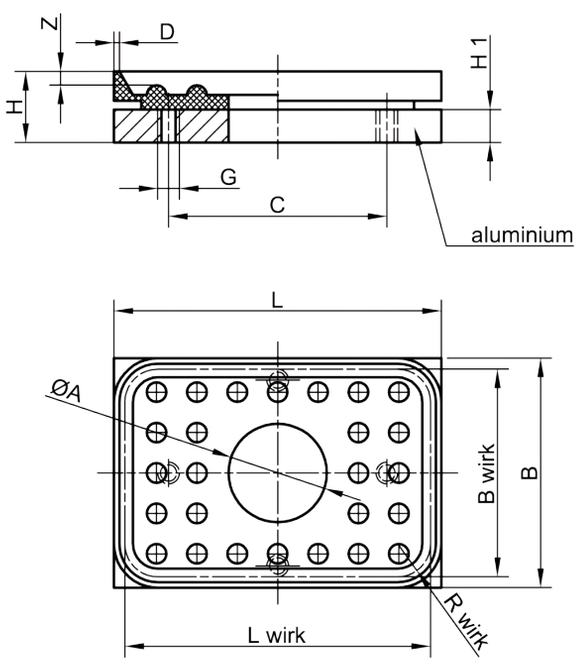

Application picture

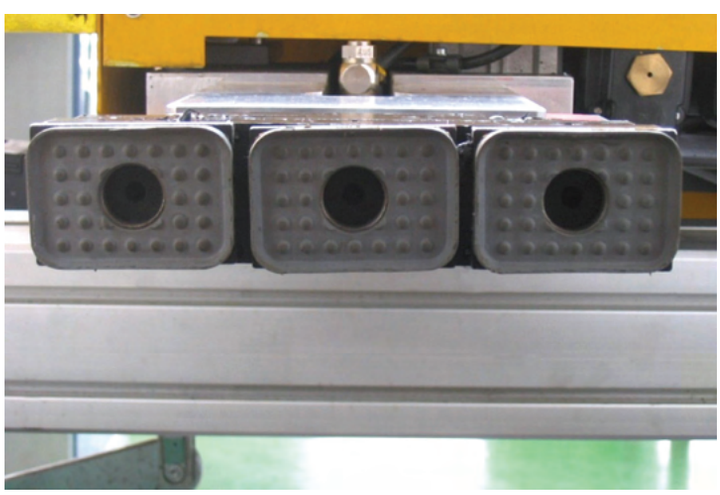

Order data / Spare parts

Technical data

Type	ØA	L	L wirk	B	B wirk	R wirk	C	D	G	H	H1	Z
BLSP 42 x 60-1	18	60	58	42	40	7	40	-	M4	13	6	2,5
BLSP 42 x 60-2	18	60	56	42	38	6	40	1	M4	13	6	2,5

Type	Part number Flat suction cup		Weight
BLSP 42 x 60-1	BLSP.042.060.121.000 NBR grey	vulcanised	0,043 kg
BLSP 42 x 60-2	BLSP.042.060.121.001 NBR grey (dick-D)	vulcanised	0,044 kg

Type	Carrying capacity in kg		
	vertical	horizontal	
BLSP 42 x 60-1	6,5	13,0	The information about the carrying capacity are theoretical calculated values without a safety factor. The calculation of the horizontal carrying capacity is made of the effective diameter, the low-pressure at a vacuum of 60% and the theoretical friction coefficient. * Tested and values calculated with a plane, dry and dust-free glass surface.
BLSP 42 x 60-2	6,0	12,0	

Product picture



Product description

Elastic and wear resistant suction cup seal Type BLSP 145 PK, vulcanised onto a sheet metal base plate. The seal has a diameter of 145 mm and is available in NBR black or grey. The suction cup is mounted with a nut from the inside onto the suspension bolt. The inner surface area has grooves and support. Lucite, which is used in the glass industry to separate glass more easily, will rest in the grooves. Glass plates will not slip easily due to the higher coefficient of friction, especially when the glass plates are in the vertical position.

Application picture

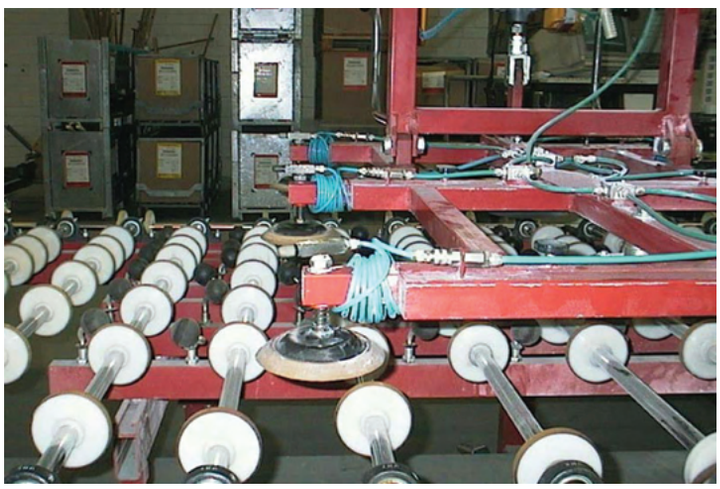

Technical drawing

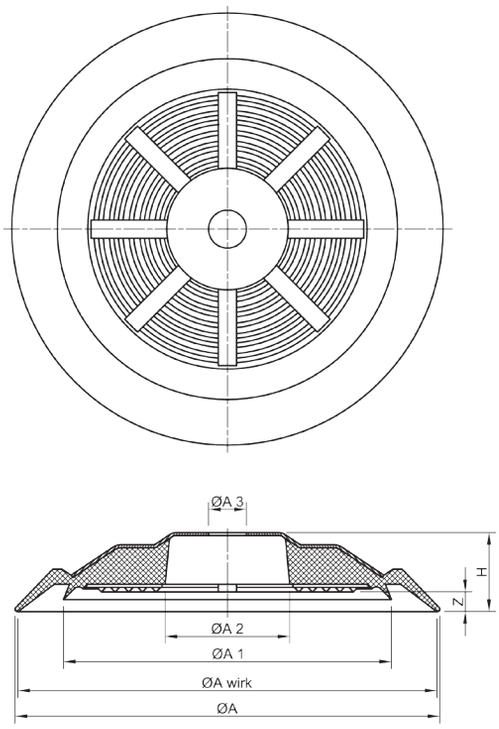

Technical data

Type	ØA	ØA wirk	ØA1	ØA2	ØA3	H	Z
BLSP 145 PK	145	138	111	40	12,5	26	5

Type	Part number Flat suction cup		Weight
BLSP 145 PK	BLSP.145.111.000 NBR black	vulcanised	0,270 kg
BLSP 145 PK	BLSP.145.121.000 NBR grey	vulcanised	0,275 kg

Type	Carrying capacity in kg	
	vertical	horizontal
BLSP 145 PK	45	91

The information about the carrying capacity are theoretical calculated values without a safety factor. The calculation of the horizontal carrying capacity is made of the effective diameter, the low-pressure at a vacuum of 60% and the theoretical friction coefficient. * Tested and values calculated with a plane, dry and dust-free glass surface.

Order data / Spare parts

Product description

The flat suction cup Type BLSP series HE is available in different diameters. The seal has grooves on the inner side and a long sealing lip with support ribs. The seal is pulled onto the aluminum base plate and secured with a clamping clip. The center support will be drilled according to your requirements. Quick and cost-saving exchange of the seal by loosening the clamping clip.

Product picture



Technical drawing

Type BLSP 150 HE

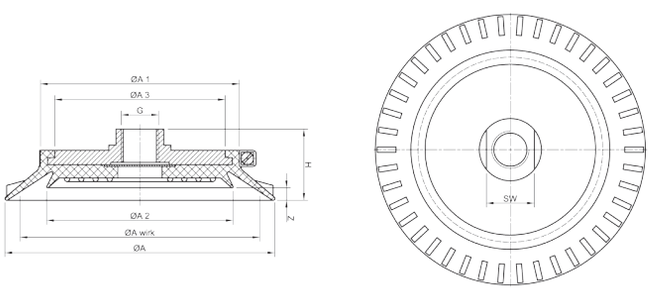

Type BLSP 200 HE

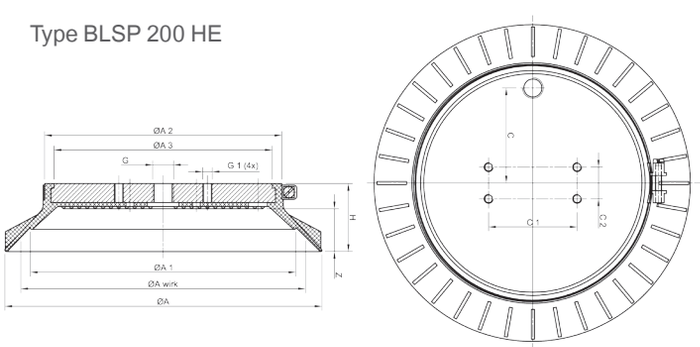

Type BLSP 100 HE

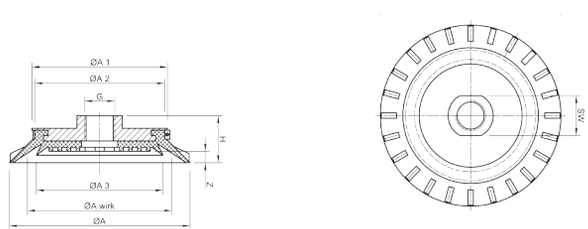

Application picture



Order data / Spare parts

Technical data

Type	ØA	ØA wirk	ØA1	G	G1	SW	H	H1	C1	C2	Z	Weight
100 HE	100	80	72	3/8“	-	22	26	18	-	-	6,3	0,115 kg
150 HE	150	135	112	1/2“	-	27	41	28	-	-	10,5	0,350 kg
200 HE	200	180	166	1/4“	M6	36	55	43	56	20	27	0,730 kg

Type	Part number (Flat suction cup complete)	Flat suction cup seal	Clamping clip
100 HE	BLSP.101.111.001 NBR black	BSPS.10.458 NBR black	BSPS.11.067
150 HE	BLSP.151.111.001 NBR black	BSPS.10.179 NBR black	BSPS.11.007
200 HE	BLSP.201.111.002 NBR black	BSPS.10.229 NBR black	BSPS.11.010

Type	Carrying capacity in kg	
	vertical	horizontal
100 HE	15	30
150 HE	43	87
200 HE	77	155

The information about the carrying capacity are theoretical calculated values without a safety factor. The calculation of the horizontal carrying capacity is made of the effective diameter, the low-pressure at a vacuum of 60% and the theoretical friction coefficient.

* Tested and values calculated with a plane, dry and dust-free glass surface.

Product picture

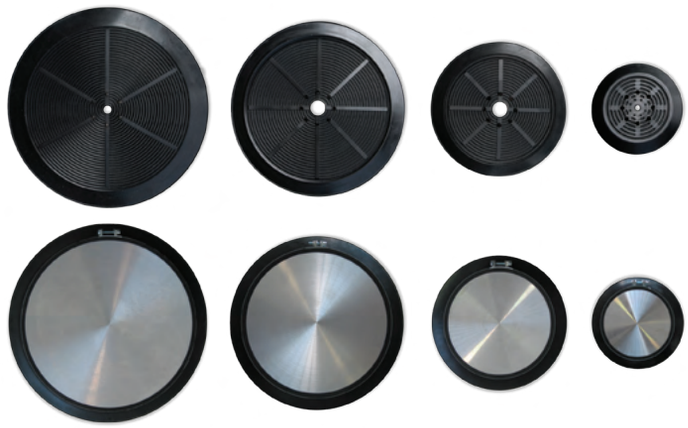

Product description

Flat suction cup Type BLSP Series RL with replaceable seal, aluminum base plate, threaded holes for mounting and clamping clip for secure clamping. The seal is in NBR black at approx. 50° Shore and the inner surface has deep grooves. The rubber lip which seals against the work piece is long, minimal force is needed when placing the vacuum lifter onto the work piece to achieve a seal. In the majority of cases, this suction cup seal is used in vacuum lifting devices. In case of wear, easy and cost-saving change of the seal by means of the clamping clip. Ready-to-install.

Other driling templates are available on request.

Application picture

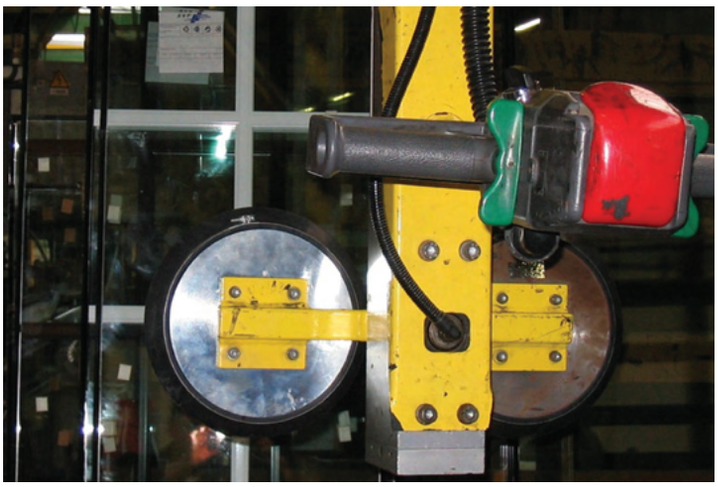

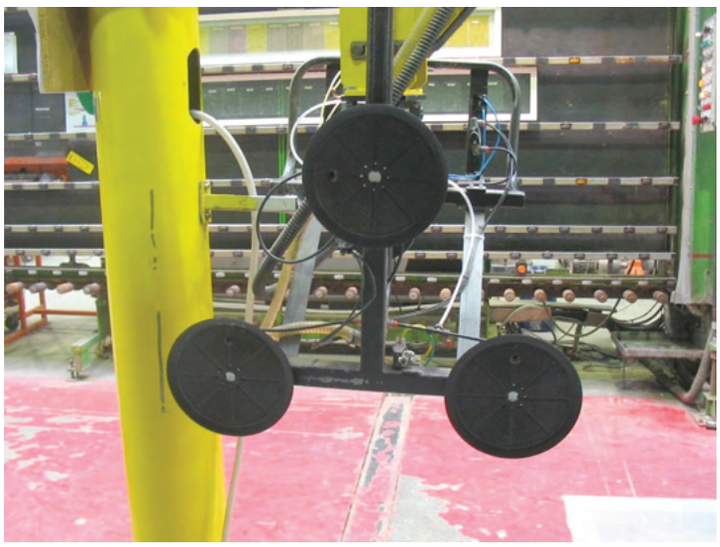

Technical drawing

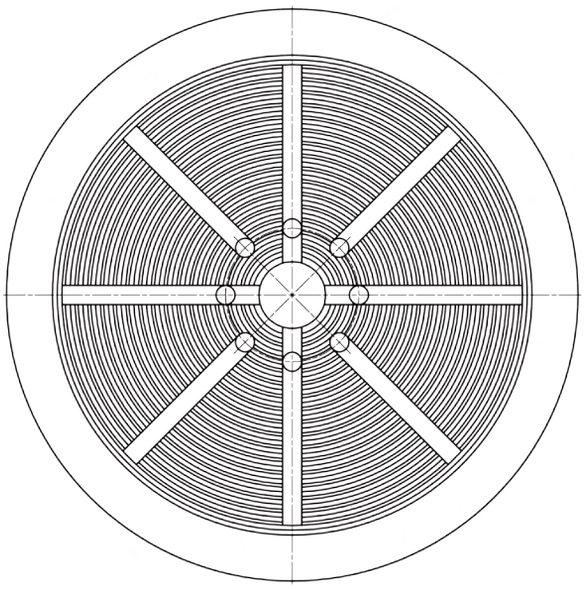

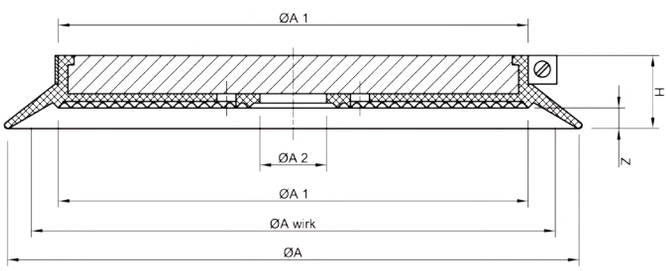

Part number Flat suction cup			Spare seal		Clamping clip	
Type	Material	Part number	Type	Part number	Type	Part number
120 RL	NBR black	BLSP.120.111.000	120 RL	BSPS.10.206	120 RL	BSPS.11.001
180 RL	NBR black	BLSP.180.111.000	180 RL	BSPS.10.175	180 RL	BSPS.11.002
200 RL	NBR black	BLSP.202.111.000	200 RL	BSPS.10.368	200 RL	BSPS.11.010
230 RL	NBR black	BLSP.230.111.000	230 RL	BSPS.10.336	230 RL	BSPS.10.011
270 RL	NBR black	BLSP.270.111.000	270 RL	BSPS.10.197	270 RL	BSPS.11.003
290 RL	NBR black	BLSP.290.111.000	290 RL	BSPS.10.299	290 RL	BSPS.11.012
320 RL	NBR black	BLSP.320.111.000	320 RL	BSPS.10.308	320 RL	BSPS.11.014
350 RL	NBR black	BLSP.350.111.000	350 RL	BSPS.10.343	350 RL	BSPS.11.015
400 RL	NBR black	BLSP.400.111.000	400 RL	BSPS.10.341	400 RL	BSPS.11.016

							Carrying capacity		
Type	ØA	ØA wirk	ØA1	ØA2	H	Z	vertical	horizontal	Weight
120 RL	120	110	96	110	22	6,0	29,00 kg	58,00 kg	0,250 kg
180 RL	180	165	148	148	23	6,5	65,00 kg	130,00 kg	0,650 kg
200 RL	200	180	150	146	30	10,5	77,00 kg	155,00 kg	0,770 kg
230 RL	232	220	198	198	23	6,5	116,00 kg	232,00 kg	1,050 kg
270 RL	270	260	235	224	22	6,5	162,00 kg	324,00 kg	1,750 kg
290 RL	290	260	240	236	30	10,5	162,00 kg	324,00 kg	1,900 kg
320 RL	320	305	270	266	30	10,5	223,00 kg	447,00 kg	2,450 kg
350 RL	350	310	300	292	30	10,5	230,00 kg	461,00 kg	2,900 kg
400 RL	400	360	350	350	30	10,5	311,00 kg	622,00 kg	3,850 kg

The information about the carrying capacity are theoretical calculated values without a safety factor. The calculation of the horizontal carrying capacity is made of the effective diameter, the low-pressure at a vacuum of 60% and the theoretical friction coefficient. * Tested and values calculated with a plane, dry and dust-free glass surface.

These flat suction cups are available in different materials. As a result, the seals can have different Shore hardnesses.
Depending on the application or the requirements, different materials are needed. You can send us a direct inquiry or you check the following homepage.
http://www.eurotech-vacuum-technologies.com

Product picture



Technical drawing

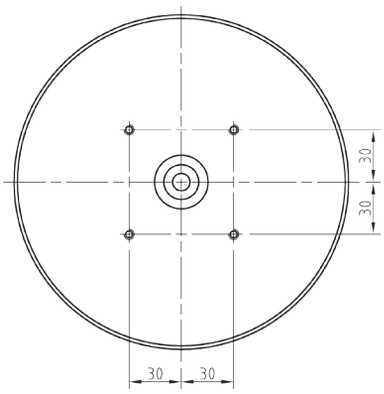

Product description BLSP 230 RL - GK Tec	Part numbers / Order data / Spare parts	
The flat suction cup in NBR black is available in different versions. The drilling templates can be adapted to the customers requirements. Complete flat suction cup consisting of flat suction cup seal, aluminum base plate, clamping clip and O-Ring.	BLSP.230.111.002 (Flat suction cup complete mounted)	
	BSPS.01.177.10 (Aluminum base plate)	
	BSPS.10.336 (Spare seal)	
	BSPS.11.011 (Clamping clip)	BSPS.20.791 (O-Ring)

Product picture



Technical drawing

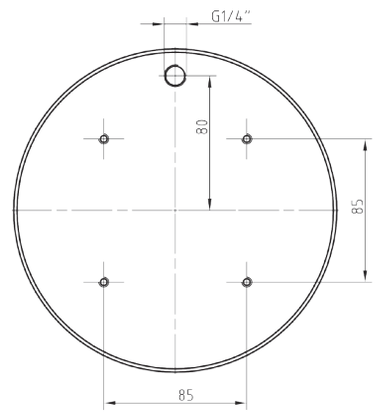

Product description BLSP 230 RL - BA	Part numbers / Order data / Spare parts
The flat suction cup in NBR black is available in different versions. The drilling templates can be adapted to the customers requirements. Complete flat suction cup consisting of flat suction cup seal, aluminum base plate and clamping clip.	BLSP.230.111.005 (Flat suction cup complete mounted)
	BSPS.10.336.02 (Spare seal)
	BSPS.01.177.15 (Aluminum base plate)
	BSPS.11.011 (Clamping clip)

Product picture



Technical drawing

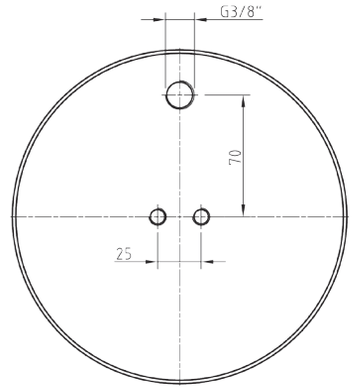

Product description BLSP 230 RL - ForEl	Part numbers / Order data / Spare parts
The flat suction cup in NBR black is available in different versions. The drilling templates can be adapted to the customers requirements. Complete flat suction cup consisting of flat suction cup seal, aluminum base plate and clamping clip.	BLSP.230.111.003 (Flat suction cup complete mounted)
	BSPS.10.336.01 (Spare seal)
	BSPS.01.177.02 (Aluminum base plate)
	BSPS.11.011 (Clamping clip)

Product picture

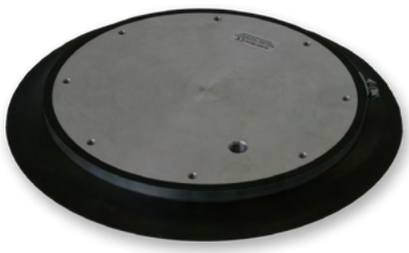

Technical drawing

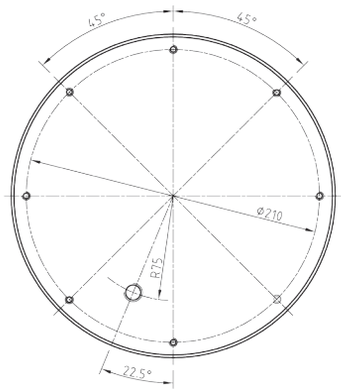

Product description BLSP 290 RL-HE	Part numbers / Order data / Spare parts
The flat suction cup in NBR black is available in different versions. The drilling templates can be adapted to the customers requirements. Complete flat suction cup, consisting of flat suction cup seal, aluminum base plate and clamping clip.	BLSP.290.111.001 (Flat suction cup complete mounted)
	BSPS.10.299 (Spare seal)
	BSPS.01.118.03 (Aluminum base plate)
	BSPS.11.012 (Clamping clip)

Product picture



Technical drawing

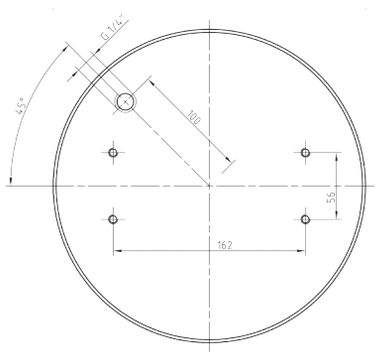

Product description BLSP 320 RL-PK	Part numbers / Order data / Spare parts	
The flat suction cup in NBR black is available in different versions and drilling templates can be adapted to the customers requirements. Complete flat suction cup, consisting of flat suction cup seal, aluminum base plate, clamping clip and fastening nipples 4 x M10x12 Type.	BLSP.320.111.006 (Flat suction cup complete mounted)	
	BSPS.10.309.02 (Spare seal)	
	BSPS.01.169.13 (Aluminum base plate)	
	BSPS.11.014 (Clamping clip)	BSPS.20.241.01 (fasten.nipples)

Product picture

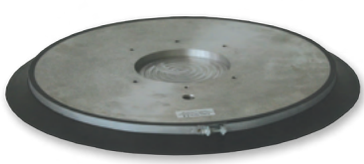

Technical drawing

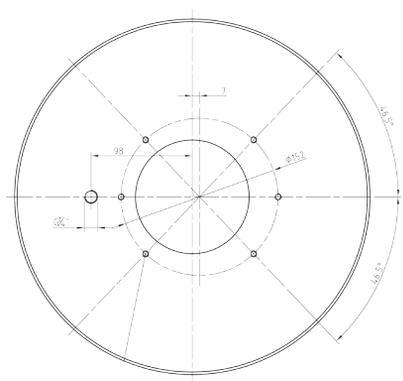

Product description BLSP 400 RL-WPG	Part numbers / Order data / Spare parts
The flat suction cup in NBR black is available in different versions. The drilling templates can be adapted to the customers requirements. Complete flat suction cup, consisting of flat suction cup seal, aluminum base plate and clamping clip.	BLSP.400.111.010 (Flat suction cup complete mounted)
	BSPS.10.341.06 (Spare seal)
	BSPS.01.179.04 (Aluminum base plate)
	BSPS.11.016 (Clamping clip)

Product picture



Product description

Flat suction cup Type BLSP 200 PK with replaceable seal and large inner volume. The seal has a diameter of 200 mm, is in NBR black at approx. 50 shore and has inner support and grooves. Four mounting pins with internal thread are installed on the back of the aluminum base plate. The seal is replaceable and secured with a clamping clip onto the base plate. In the majority of cases this suction cup is installed in vacuum lifting devices. Ready-to-install incl. elbow adaptor and hose nipple.

Other drilling templates are available on request.

Application picture



Technical drawing

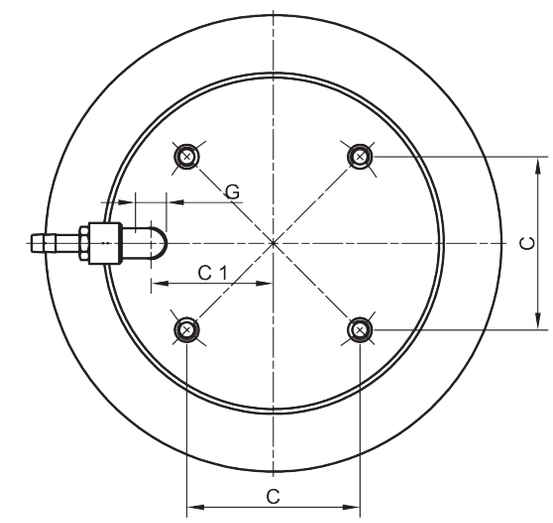

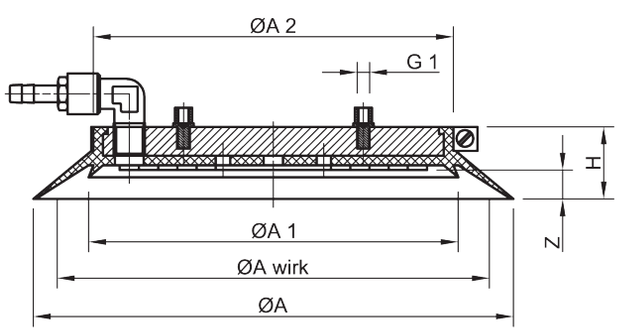

Technical data

Type	ØA	ØA wirk	ØA1	ØA2	C	C1	G	G1	H	Z	Weight
BLSP 200 PK	200	180	154	150	73	60	1/4“	M6	30	9,0	0,770 kg

Type	Part number Flat suction cup	Spare seal	Clamping clip
BLSP 200 PK	BLSP.200.111.002 NBR black	BSPS.10.207 NBR black	BSPS.11.010

Type	Carrying capacity in kg	
	vertical	horizontal
BLSP 200 PK	77	155

The information about the carrying capacity are theoretical calculated values without a safety factor. The calculation of the horizontal carrying capacity is made of the effective diameter, the low-pressure at a vacuum of 60% and the theoretical friction coefficient. * Tested and values calculated with a plane, dry and dust-free glass surface.

Order data / Spare parts

Product description

Flat suction cup Type BLSP 280 PK with replaceable seal and large inner volume. The seal has a diameter of 280 mm, is in NBR black at approx. 50 Shore and has an inner support and grooves. Four mounting pins with internal thread are installed on the back of the aluminum base plate. The seal is replaceable and secured with a clamping clip onto the base plate. In the majority of cases, this suction cup is installed in vacuum lifting devices. Ready-to-install incl. elbow adaptor and hose nipple.

Other drilling templates are available on request.

Product picture



Technical drawing

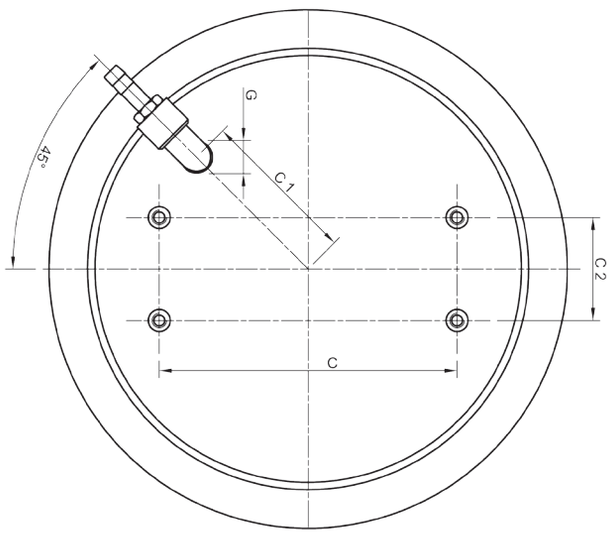

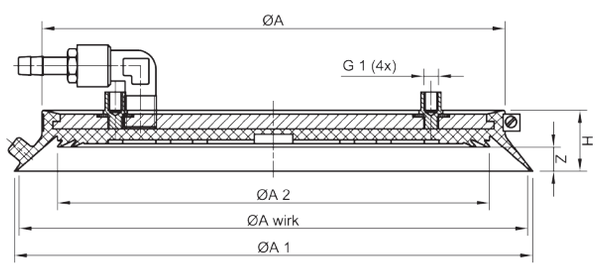

Application picture

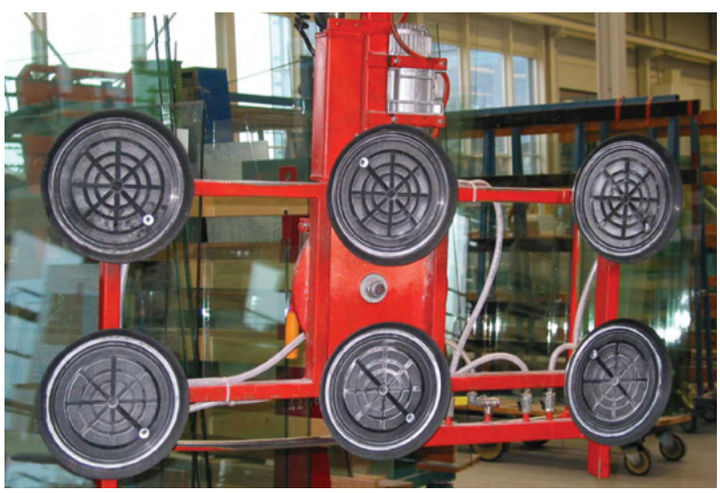

Order data / Spare parts

Technical data

Type	ØA	ØA wirk	ØA1	ØA2	C	C1	C2	G	G1	H	Z	Weight
BLSP 280 PK	282	275	252	234	162	80	56	1/4“	4xM8	33	13	1,490 kg

Type	Part number Flat suction cup	Flat suction cup seal	Clamping clip
BLSP 280 PK	BLSP.280.111.001 NBR black	BSPS.10.189 NBR black	BSPS.11.009
	BLSP.280.121.001 NBR grey	BSPS.10.240 NBR grey	
	BLSP.280.126.001 NR grey	BSPS.10.421 NR grey	

The information about the carrying capacity are theoretical calculated values without a safety factor. The calculation of the horizontal carrying capacity is made of the effective diameter, the low-pressure at a vacuum of 60% and the theoretical friction coefficient. * Tested and values calculated with a plane, dry and dust-free glass surface.

Type	Carrying capacity in kg	
	vertical	horizontal
BLSP 280 PK	181	363

Product picture



Product description

The flat suction cup Type BLSP 200 PK-BY has an exchangeable seal with a diameter of 200 mm and a big inner volume. The seal is in NBR black with a Shore hardness of approx. 50. The inner surface of the seal has a groove rubber support. On the back of the aluminum base plate there is a mini-ejector Type BDCN-DJ installed as well as mounting nipples with M6 inside thread. In case of wear, the seal can be exchanged quick and cost- saving by loosening the clamping clip. The flat suction cup is used predominantly in vacuum lifting devices and is ready- to-install.

Available with other drilling templates on request.

Technical drawing

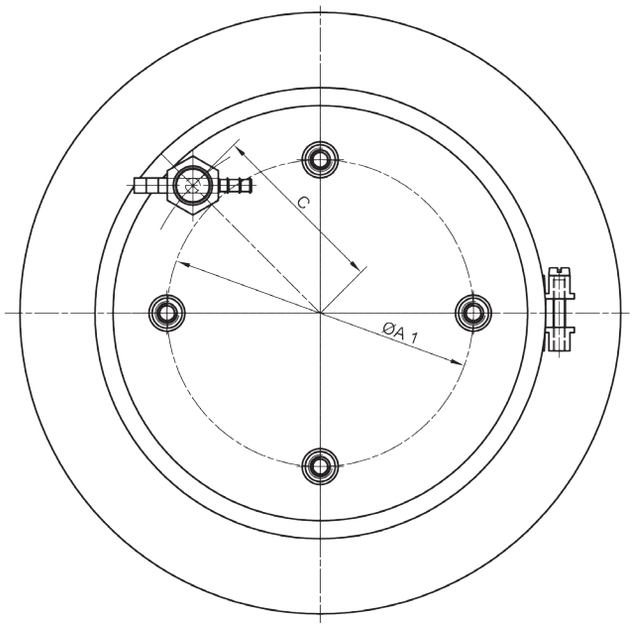

Technical drawing

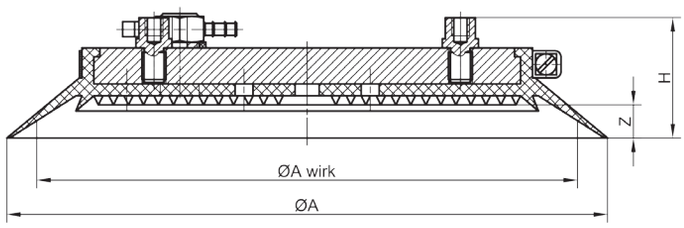

Technical data

Type	ØA	ØA wirk	ØA1	C	H	Z	Weight
BLSP 200 PK-BY	200	180	102	60	40	11	0,770 kg

Type	Part number Flat suction cup	Flat suction cup seal	Clamping clip
BLSP 200 PK-BY	BLSP.200.111.010	BSPS.10.207 NBR black	BSPS.11.010

Type	Carrying capacity in kg	
	vertical	horizontal
BLSP 200 PK-BY	77	155

The information about the carrying capacity are theoretical calculated values without a safety factor. The calculation of the horizontal carrying capacity is made of the effective diameter, the low-pressure at a vacuum of 60% and the theoretical friction coefficient. *Tested and values calculated with a plane, dry and dust-free glass surface.

Order data / Spare parts

Product description

The flat suction cup Type BLSP 280 PK-BY has an exchangeable seal with a diameter of 280 mm and a big inner volume. The seal is in NBR black with a Shore hardness of approx. 50. The inner surface of the seal has a groove rubber support. On the back of the aluminum base plate there is a mini-ejector Type BDCN-DJ installed as well as 4 mounting nipples with M8 inside thread. In case of wear, the seal can be exchanged quick and cost- saving by loosening the clamping clip. The flat suction cup is used predominantly in vacuum lifting devices and is ready- to-install.

Available with other drilling templates on request.

Product picture



Technical drawing

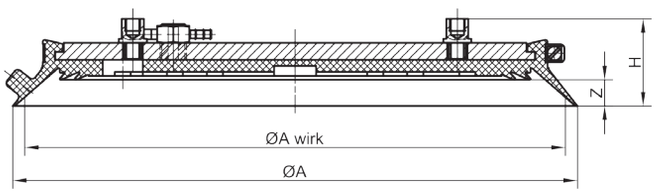

Technical drawing

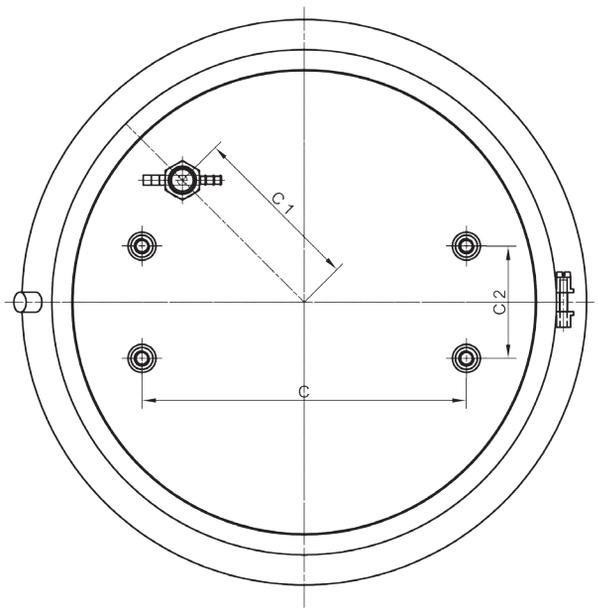

Order data / Spare parts

Type	ØA	ØA wirk	C	C1	C2	H	Z	Weight
BLSP 280 PK-BY	282	275	162	86	56	43,5	13	1,490 kg

Type	Part number Flat suction cup	Flat suction cup seal	Clamping clip
BLSP 280 PK-BY	BLSP.280.111.010	BSPS.10.189 NBR black	BSPS.11.009

Type	Carrying capacity in kg	
	vertical	horizontal
BLSP 280 PK-BY	181	363

Technical data

The information about the carrying capacity are theoretical calculated values without a safety factor. The calculation of the horizontal carrying capacity is made of the effective diameter, the low-pressure at a vacuum of 60% and the theoretical friction coefficient. * Tested and values calculated with a plane, dry and dust-free glass surface.

Product picture



Product description

The flat suction cup Type BLSP 200 PK-AR has an exchangeable seal with a diameter of 200 mm and a big inner volume. The seal is in NBR black with a Shore hardness of approx. 50. The inner surface of the seal has a groove rubber support. On the back of the aluminum base plate there is a extension installed with G 1/8“ outside thread as well as 4 mounting nipples with M6 inside thread.

In case of wear, the seal can be exchanged quick and cost- saving by loosening the clamping clip. The flat suction cup is used predominantly in vacuum lifting devices and is ready- to-install.

Available with other drilling templates on request.

Application picture

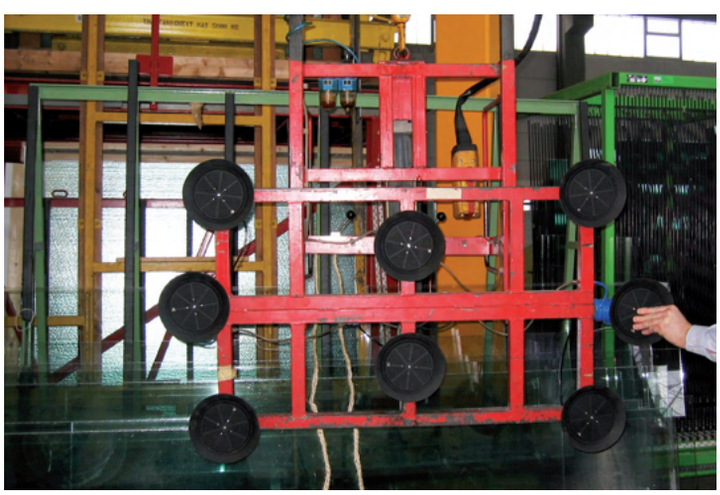

Technical drawing

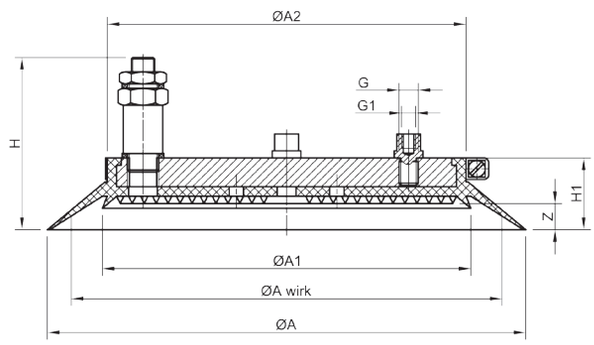

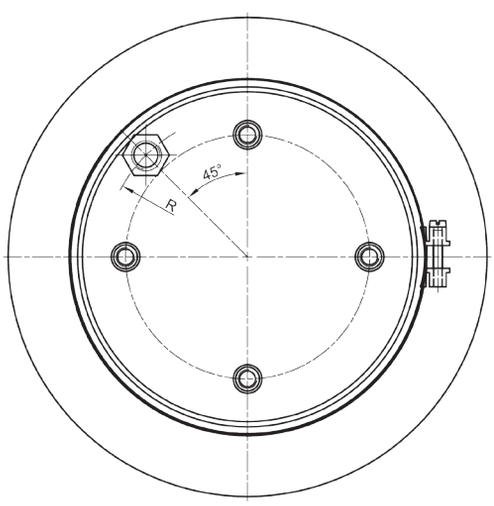

Technical data

Order data / Spare parts

Type	ØA	ØA wirk	ØA1	ØA2	G	G1	H	H1	R	Z	Weight
BLSP 200 PK-AR	200	180	154	150	M8	M6	72	30	60	11	0,778 kg

Type	Part number Flat suction cup	Flat suction cup seal	Clamping clip
BLSP 200 PK-AR	BLSP.200.111.012	BSPS.10.207 NBR black	BSPS.11.010

Type	Carrying capacity in kg	
	vertical	horizontal
BLSP 200 PK-AR	77	155

The information about the carrying capacity are theoretical calculated values without a safety factor. The calculation of the horizontal carrying capacity is made of the effective diameter, the low-pressure at a vacuum of 60% and the theoretical friction coefficient. * Tested and values calculated with a plane, dry and dust-free glass surface.

Product description

The flat suction cup Type BLSP 200 RL-HE has an exchangeable seal with a diameter of 200 mm and a big inner volume. The seal is in NBR black with a Shore hardness of approx. 50. The inner surface of the seal has a groove rubber support. The back side of the aluminum base plate had 4 threaded holes with 4 x M6 inside thread.
In case of wear, the seal can be exchanged quick and cost- saving by loosening the clamping clip. The flat suction cup is used predominantly in vacuum lifting devices and is ready- to-install.

Available with other drilling templates on request.

Product picture





Technical drawing

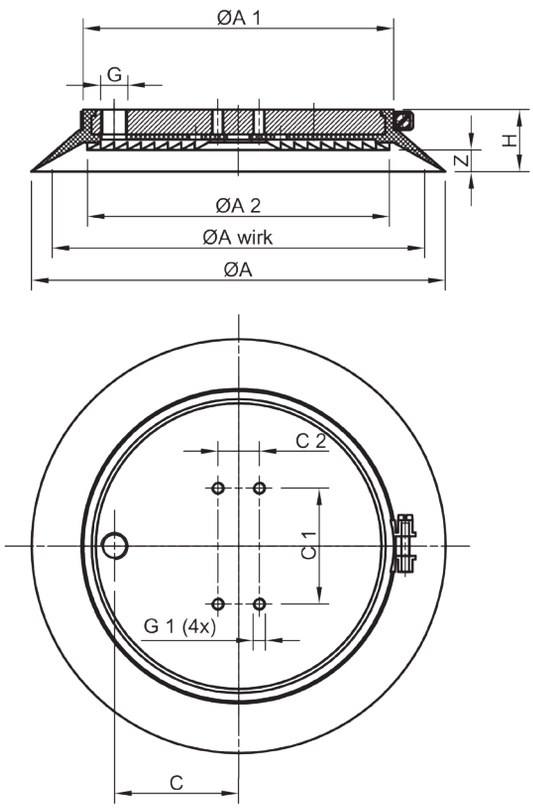

Application picture

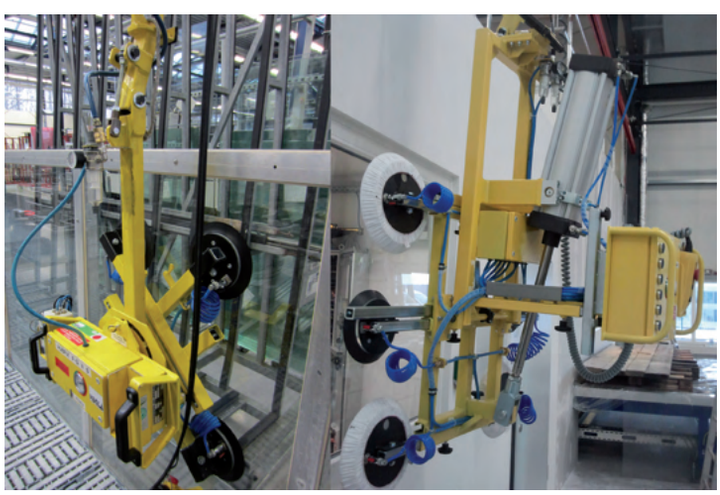

Order data / Spare parts

Type	ØA	ØA wirk	ØA1	ØA2	C	C1	C2	G	G1	H	Z	Weight
BLSP 200 RL-HE	200	180	150	146	60	56	20	1/4“	M6	30	10,5	0,757 kg

Type	Part number Flat suction cup	Flat suction cup seal	Clamping clip
BLSP 200 RL-HE	BLSP.202.111.009	BSPS.10.368 NBR black	BSPS.11.010

Type	Carrying capacity in kg	
	vertical	horizontal
BLSP 200 RL-HE	77	150

Technical data

The information about the carrying capacity are theoretical calculated values without a safety factor. The calculation of the horizontal carrying capacity is made of the effective diameter, the low-pressure at a vacuum of 60% and the theoretical friction coefficient. * Tested and values calculated with a plane, dry and dust-free glass surface.

Product picture



Product description

Flat suction cup Type BLSP 200 PK with vulcanized seal and large inner volume. The seal has a diameter of 200 mm and is in NBR black at approx. 50 Shore. With inner support and groove. Four mounting pins with a M6 internal thread are installed on the back of the steel ring. There is a rubber nipple for the vacuum connection. In the majority of cases this suction cup is installed in vacuum lifting devices.

Application picture

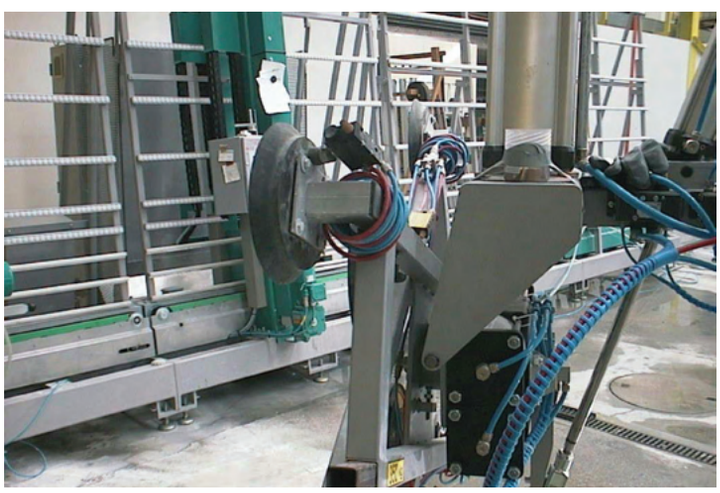

Technical drawing

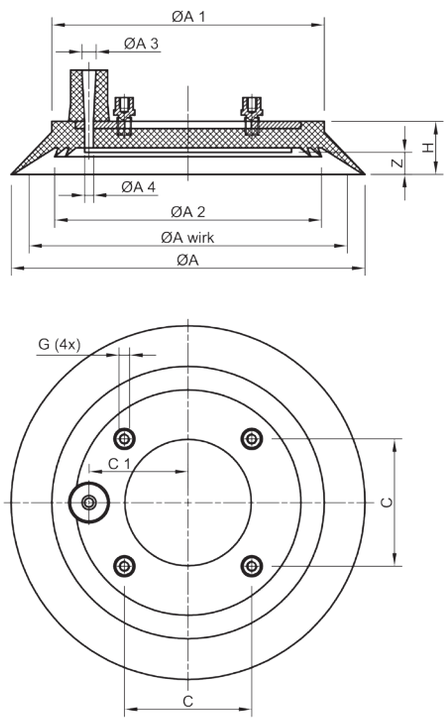

Technical data

Type	ØA	ØA wirk	ØA1	ØA2	ØA3	ØA4	C	C1	G	H	Z
BLSP 200 PK	200	180	154	151	8	5	72	56	4xM6	30	12,5

Type	Part number Flat suction cup	Flat suction cup seal	Weight
BLSP 200 PK	BLSP.200.111.007 NBR black	vulcanised	0,600 kg

Type	Carrying capacity in kg	
	vertical	horizontal
BLSP 200 PK	77	155

Order data / Spare parts

The information about the carrying capacity are theoretical calculated values without a safety factor. The calculation of the horizontal carrying capacity is made of the effective diameter, the low-pressure at a vacuum of 60% and the theoretical friction coefficient. * Tested and values calculated with a plane, dry and dust-free glass surface.

Type BLSP 280 PK vulcanised

Product description

Flat suction cup Type BLSP 280 PK with vulcanized seal and large inner volume. The seal has a diameter of 280 mm and is in NBR black at approx. 50 Shore, with inner support and groove. Eight mounting pins with a M8 internal thread are installed on the back of the steel ring. There is a rubber nipple for the vacuum connection. In the majority of cases this suction cup is installed in vacuum lifting devices.

Product picture



Technical drawing

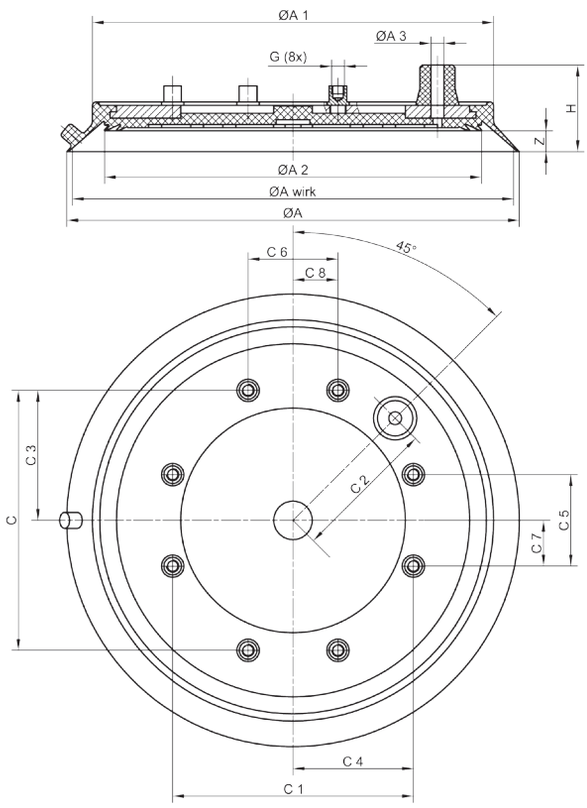

Application picture

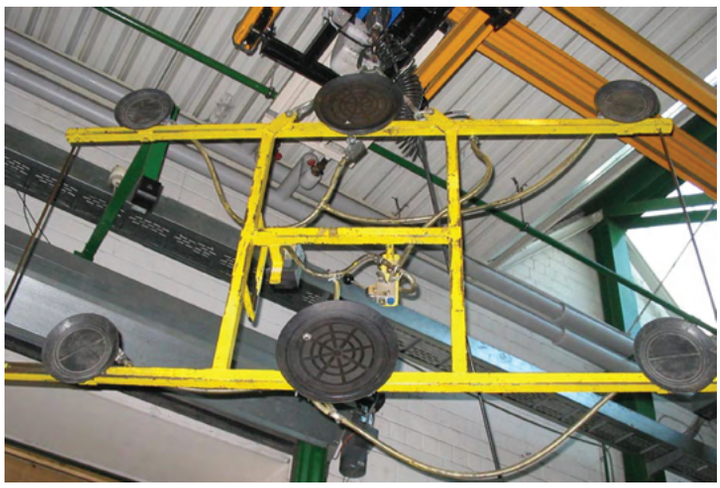

Order data / Spare parts

Technical data

Type	ØA	ØA wirk	ØA1	ØA2	ØA3	G		H	Z
BLSP 280 PK	282	275	250	234	8	8xM8 (4xM8)		54	13
Type	**C**	**C1**	**C2**	**C3**	**C4**	**C5**	**C6**	**C7**	**C8**
BLSP 280 PK	162	150	90	81	75	57	56	28,5	28

Type	Part number Flat suction cup	Flat suction cup seal	Weight
BLSP 280 PK	BLSP.280.111.013 NBR black 4xM8	vulcanised	2,170 kg
BLSP 280 PK	BLSP.280.111.016 NBR black 8xM8	vulcanised	2,192 kg

Type	Carrying capacity in kg	
	vertical	horizontal
BLSP 280 PK	181	363

The information about the carrying capacity are theoretical calculated values without a safety factor. The calculation of the horizontal carrying capacity is made of the effective diameter, the low-pressure at a vacuum of 60% and the theoretical friction coefficient. * Tested and values calculated with a plane, dry and dust-free glass surface.

Product picture

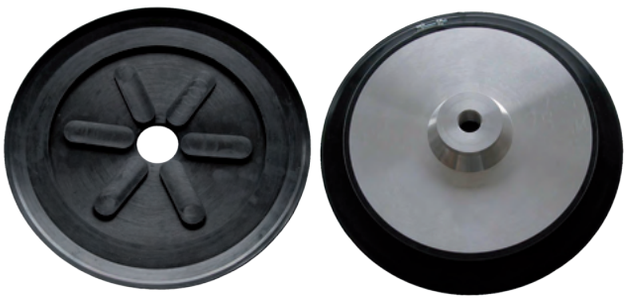

Product description

Flat suction cup seal Type BLSP 290 BR with aluminum base plate. The seal has a diameter of 290 mm, is in NBR black at approx. 65 Shore. The inner surface has small support naps. The rubber lip which seals against the work piece is short, a quick ventilation for high stacking speed is assured. The aluminum base plate has a threaded centric hole for mounting. Quick and cost-saving change of the seal by means of the clamping clip. Ready-to-install.

Application picture

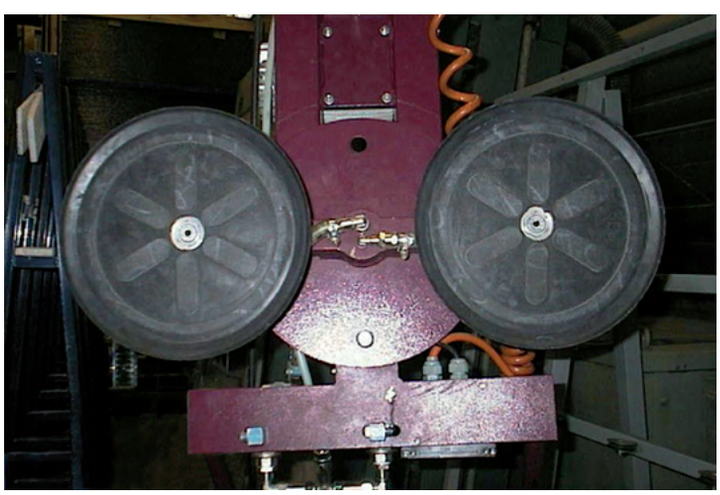

Technical drawing

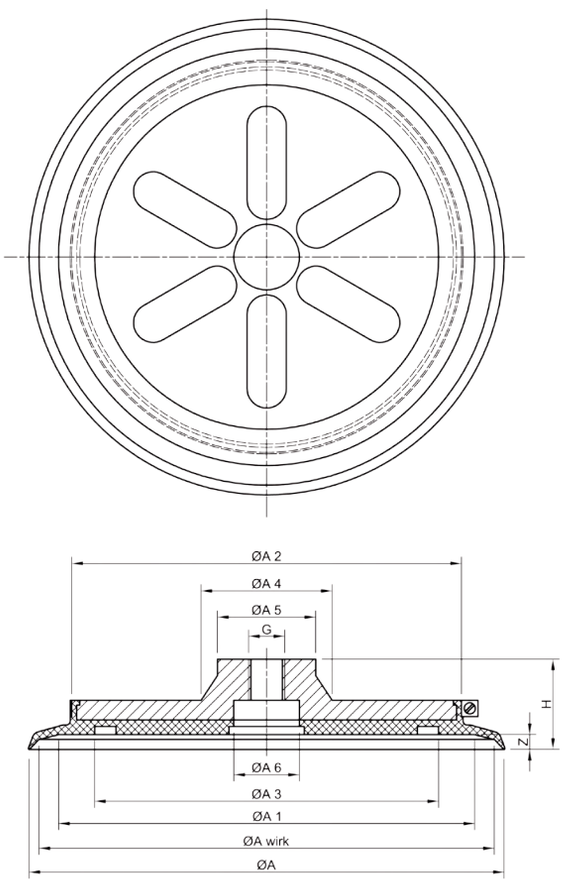

Technical data

Type	ØA	ØA wirk	ØA1	ØA2	ØA3	ØA4	ØA5	ØA6	G	H	Z	Weight
BLSP 290 BR	290	278	254	238	210	80	60	40	M22x1,5	55	9	2,080 kg

Type	Part number Flat suction cup	Flat suction cup seal	Clamping clip
BLSP 290 BR	BLSP.292.111.001 NBR black	BSPS.10.237 NBR black	BSPS.11.003

Type	Carrying capacity in kg	
	vertical	horizontal
BLSP 290 BR	185	371

The information about the carrying capacity are theoretical calculated values without a safety factor. The calculation of the horizontal carrying capacity is made of the effective diameter, the low-pressure at a vacuum of 60% and the theoretical friction coefficient. * Tested and values calculated with a plane, dry and dust-free glass surface.

Order data / Spare parts

Product description

Suction cup Type BLSP 320 JB with replaceable seal, aluminum base plate and threaded centric hole for mounting as well as a clamping clip for secure clamping of the seal. The seal has a diameter of 320 mm, is in NBR black at approx. 50 Shore and the inner surface has deep grooves. The rubber lip, which seals against the work piece is long, minimal force is needed when placing the vacuum lifter onto the work piece to achieve a seal. In the majority of cases, this suction cup seal is used in vacuum lifting devices. Ready-to-install.

Product picture



Technical drawing

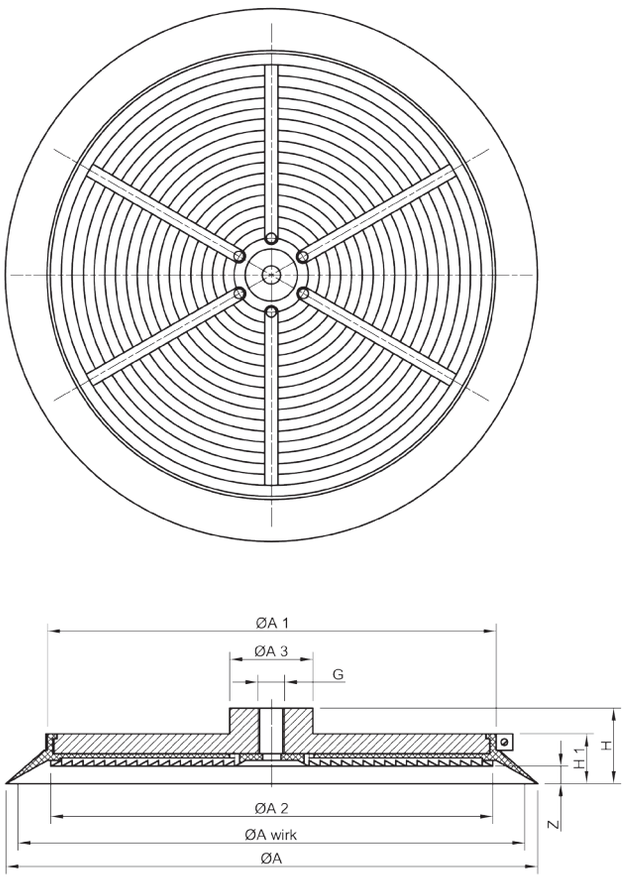

Application picture



Order data / Spare parts

Technical data

Type	ØA	ØA wirk	ØA1	ØA2	ØA3	G	H	H1	Z	Weight
BLSP 320 JB	320	305	273	270	50	M16	44	28,5	10,5	2,500 kg

Type	Part number Flat suction cup	Flat suction cup seal	Clamping clip
BLSP 320 JB	BLSP.320.111.001 NBR black	BSPS.10.309 NBR black	BSPS.11.014

Type	Carrying capacity in kg	
	vertical	horizontal
BLSP 320 JB	223	447

The information about the carrying capacity are theoretical calculated values without a safety factor. The calculation of the horizontal carrying capacity is made of the effective diameter, the low-pressure at a vacuum of 60% and the theoretical friction coefficient. * Tested and values calculated with a plane, dry and dust-free glass surface.

Product picture



Product description

Suction cup Type BLSP - RL - WPG with replaceable seal and small inner volume. There are 3 different sizes available in NBR black at approx. 50 shore with inner support grooves. The seal is replaceable and secured with a clamping clip onto the base plate. The aluminum base plate has 5 x M6 inside threads or 5 x 1/4”-20 UNC as well as a 1/8” vacuum connection 63,5 mm excentric. In the majority of cases this suction cup is installed on vacuum lifting devices.

Application picture



Technical drawing

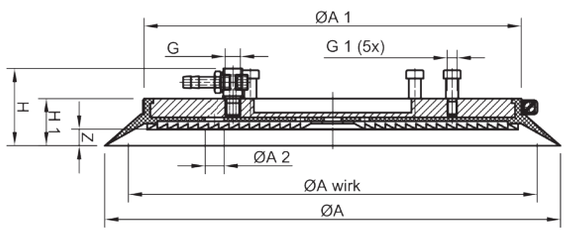

Technical data

Type	ØA	ØA wirk	ØA1	ØA2	H	H1	G	G1	Z	Weight
290 RL-WPG	290	260	240	12	49	30	1/8“	M6 | 1/4“-20	10,5	1,856 kg
320 RL-WPG	320	290	270	12	49	30	1/8“	M6 | 1/4“-20	10,5	2,355 kg
400 RL-WPG	400	370	350	12	49	30	1/4“	M6 | 1/4“-20	10,5	3,695 kg

Order data / Spare parts

Type	Part number Flat suction cup		Flat suction cup seal	Clamping clip
	M6	1/4“-20 UNC		
290 RL-WPG	BLSP.290.111.011	BLSP.290.111.011.01	BSPS.10.299.05 NBR black	BSPS.11.012
320 RL-WPG	BLSP.320.111.016	BLSP.320.111.016.01	BSPS.10.309.07 NBR black	BSPS.11.014
400 RL-WPG	BLSP.400.111.010	BLSP.400.111.010.01	BSPS.10.341.06 NBR black	BSPS.11.016

Type	Carrying capacity in kg		
	vertical	horizontal	
290 RL-WPG	162	324	The information about the carrying capacity are theoretical calculated values without a safety factor. The calculation of the horizontal carrying capacity is made of the effective diameter, the low-pressure at a vacuum of 60% and the theoretical friction coefficient. * Tested and values calculated with a plane, dry and dust-free glass surface.
320 RL-WPG	184	369	
400 RL-WPG	390	560	

You can find the Mounting kit / Reversion kit incl. locating screw with hexagon socket and hose nipple on the next page!!!

Type BLSP 300 WPG vulc.

Product description

Flat suction cup seal Type BLSP 300 WPG with vulcanized aluminum support ring. The flat suction cup seal has a diameter of 300 mm, is in NBR black at approx. 50 shore and has an inner surface with small grooves. The seal has an very small inner volume and needs little vacuum to be evacuated. The seal in installed by means of 5 small threaded bolts and can be replaced quickly.

Ready-to- install.

Product picture



Technical drawing

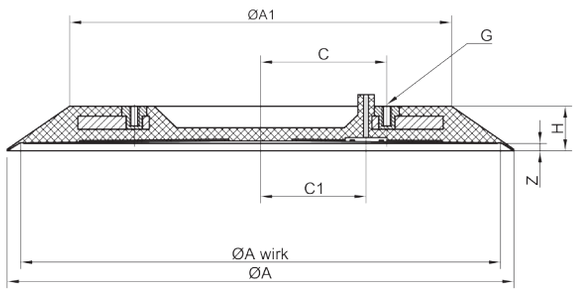

Application picture

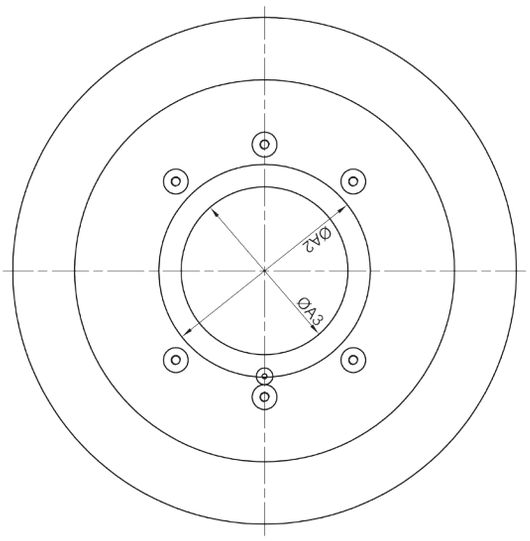

Order data / Spare parts

Technical data

Type	ØA	ØA wirk	ØA1	ØA2	ØA3	C	C1	H	Z	Weight
BLSP 300 WPG	305	289	230	128	101	76	63,5	27	4,5	0,950 kg

Type	Part number Flat suction cup	G	Flat suction cup seal
BLSP 300 WPG	BLSP.300.111.000 NBR schwarz	1/4” 20 UNC	vulcanised

Type	Carrying capacity in kg	
	vertical	horizontal
BLSP 300 WPG	180	360

The information about the carrying capacity are theoretical calculated values without a safety factor. The calculation of the horizontal carrying capacity is made of the effective diameter, the low-pressure at a vacuum of 60% and the theoretical friction coefficient. * Tested and values calculated with a plane, dry and dust-free glass surface.

Mounting kit / Reversion kit - incl. locating screw with hexagon socket and hose nipple

Type	ISO Montage	US Montage
Hose nipple	G1/8“ x 8	G1/8“ x 8
Square nipple	custom-made product	custom-made product
Blank plug	G1/8“	G1/8“
Fibre ring	G1/8“	G1/8“
locating screw with hexagon so.	M6 x 16 mm ISO-screw thread	5/16 x 1/2 1/4“-20 US-screw.
Part number	BSPS.20.591	BSPS.20.591.01

Picture locating screw with hexagon socket



Product picture



Product description

The flat suction cup Type BLSP-SCP is in four different diameters available. The plane aluminum base plate has at the bottoms side an groove rubber support installed as well as the special foam rubber seal Type SCP. The SCP seal is suitable to handle glass plates with structured surface, which is not possible with our regular rubber seals. The SCP seal is easy to replace in case of wear.

-On request, we supply the suction cup with drilled and tapped holes to your request -

Product picture



Technical drawing

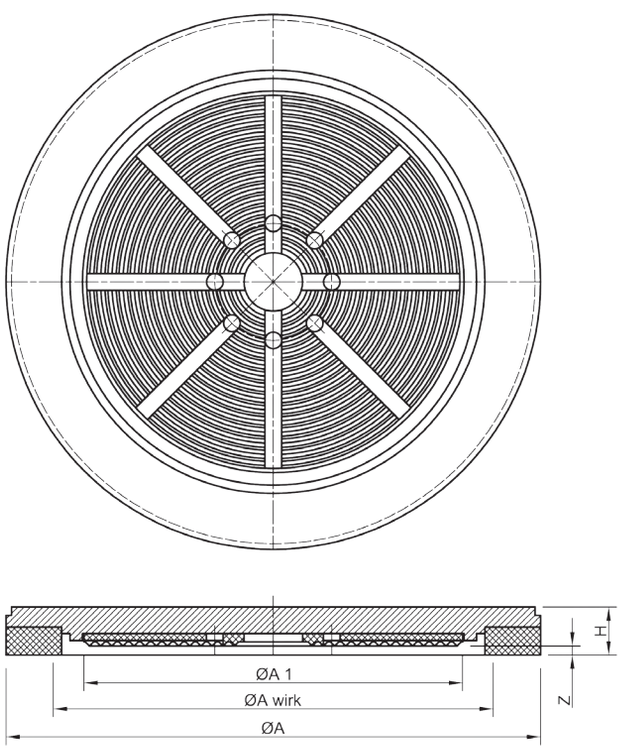

Technical data

Order data / Spare parts

Type	ØA	ØA wirk	ØA1	H	Z	Weight
BLSP 142 SCP	142	118	88	17,25	3,25	0,458 kg
BLSP 192 SCP	192	158	136	17,25	3,25	0,858 kg
BLSP 232 SCP	232	198	136	17,25	3,25	1,256 kg
BLSP 344 SCP	344	310	222	17,25	3,25	2,848 kg

Type	Part number	Carrying capacity in kg	
		vertical	horizontal
BLSP 142 SCP	BLSP.142.232.000	33,00 kg	66,00 kg
BLSP 192 SCP	BLSP.192.232.000	59,00 kg	119,00 kg
BLSP 232 SCP	BLSP.232.232.000	94,00 kg	188,00 kg
BLSP 344 SCP	BLSP.344.232.000	230,00 kg	461,00 kg

The information about the carrying capacity are theoretical calculated values without a safety factor. The calculation of the horizontal carrying capacity is made of the effective diameter, the low-pressure at a vacuum of 60% and the theoretical friction coefficient. * Tested and values calculated with a plane, dry and dust-free glass surface.

Product description

Flat suction cup seal Type BLSP 230 NO with aluminum base plate. The flat suction cup seal has a diameter of 230 mm, is in NBR black at approx. 50 Shore and has an inner surface with small support naps. The rubber lip which seals against the work piece is short and a quick ventilation for high stacking speed is assured. The aluminum base plate has a threaded centric hole for mounting. Quick and cost-saving change of the seal by means of the clamping clip.

Ready-to- install.

Product picture



Technical drawing

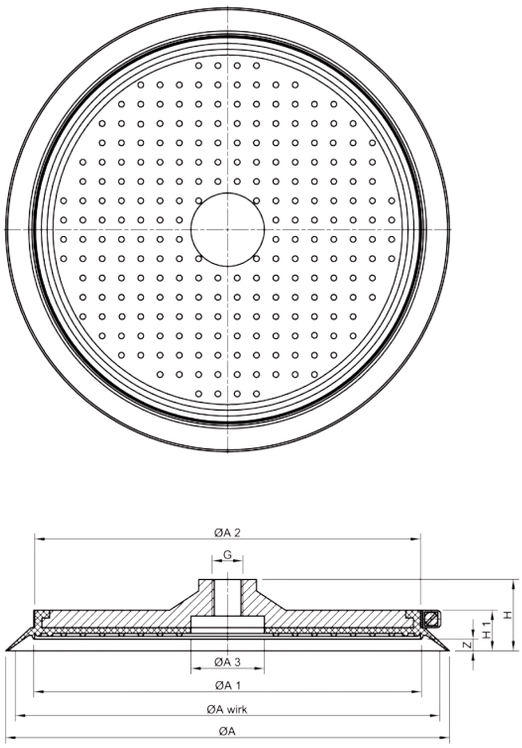

Application picture



Order data / Spare parts

Technical data

Type	ØA	ØA wirk	ØA1	ØA2	ØA3	H	H1	Z	Weight
BLSP 230 NO	230	220	201	200	38	37	21	6	0,950 kg

Type	Part number Flat suction cup	Flat suction cup seal	Clamping clip
BLSP 230 NO	BLSP.233.111.001 NBR black	BSPS.10.231 NBR black	BSPS.11.011
BLSP 230 NO	BLSP.233.121.001 NBR grey	BSPS.10.455 NBR grey	BSPS.11.011

Type	Carrying capacity in kg	
	vertical	horizontal
BLSP 230 NO	116	232

The information about the carrying capacity are theoretical calculated values without a safety factor. The calculation of the horizontal carrying capacity is made of the effective diameter, the low-pressure at a vacuum of 60% and the theoretical friction coefficient. * Tested and values calculated with a plane, dry and dust-free glass surface.

Product picture



Product description

Flat Suction cup Type BLSP 250 COP with nap rubber support. The seal is in NBR grey at approx. 50 Shore and has a diameter of 250 mm. Due to the geometry of the rubber lip, only light pressure is requested before the vacuum is switched on. The rubber seal is clamped onto the base plate by means of a clamping clip. In case of wear, only the rubber seal needs to be changed.

On demand we supply the base plate with drilled and tapped holes to fit your machine.

Application picture



Technical drawing

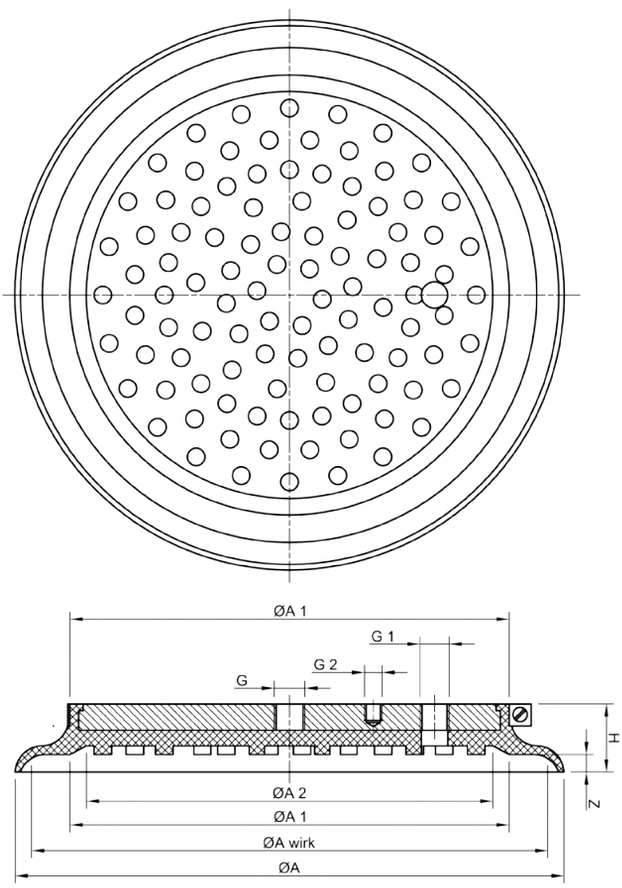

Technical data

Type	ØA	ØA wirk	ØA1	ØA2	G	G1	G2	H	Z	Weight
BLSP 250 COP	250	235	200	185	14x1,5	1/4“	M8	31	8	1,550 kg

Type	Part number Flat suction cup	Flat suction cup seal	Clamping clip
BLSP 250 COP	BLSP.252.121.001 NBR grey	BSPS.10.396.01 NBR grey	BSPS.11.011

Type	Carrying capacity in kg	
	vertical	horizontal
BLSP 250 COP	132	265

The information about the carrying capacity are theoretical calculated values without a safety factor. The calculation of the horizontal carrying capacity is made of the effective diameter, the low-pressure at a vacuum of 60% and the theoretical friction coefficient. * Tested and values calculated with a plane, dry and dust-free glass surface.

Order data / Spare parts

Type BLSP 250 NOG vulcanised

Product description

Flat suction cup seal Type BLSP 250 NOG with vulcanised steel plate. The seal has a diameter of 250 mm, is in NBR grey at approx. 55 Shore and the inner surface has large support naps. The rubber lip which seals against the work piece is short and a quick ventilation for high stacking speed is assured. The steel base plate has threaded holes on the back side and a groove with mounted sealing ring. Ready-to-install.

Product picture



Technical drawing

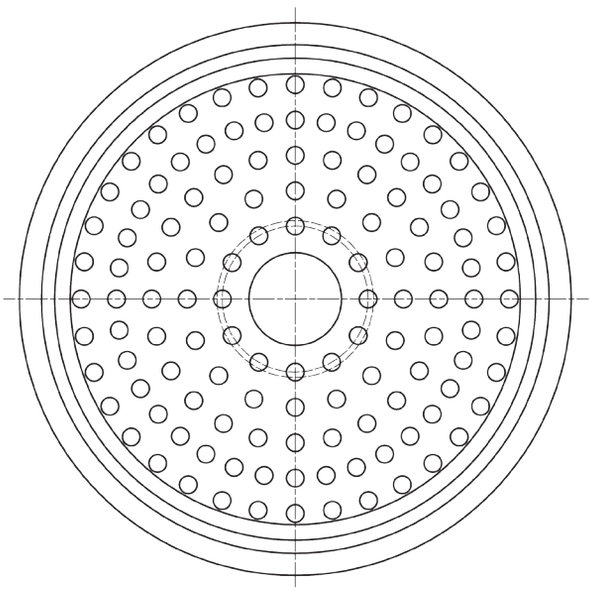

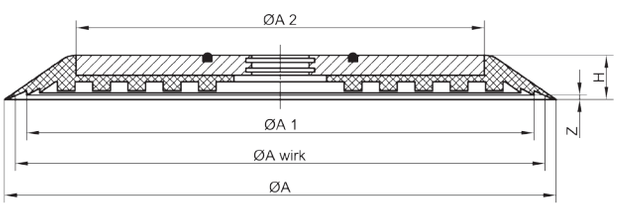

Application picture

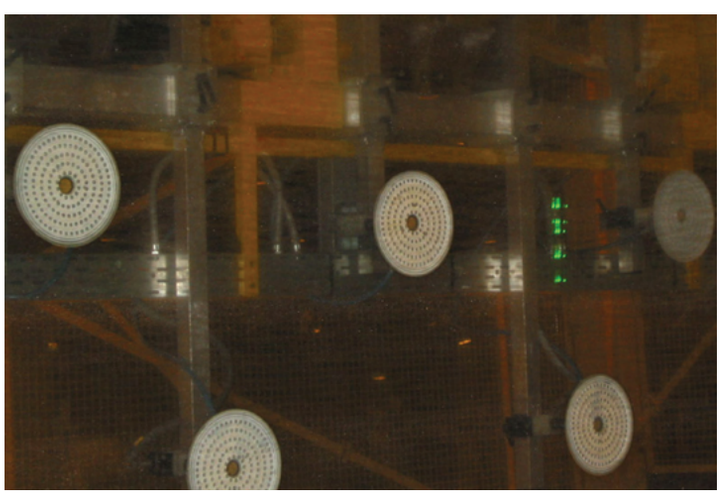

Order data / Spare parts

Technical data

Type	ØA	ØA wirk	ØA1	ØA2	H	Z	Weight
BLSP 250 NOG	250	240	230	185	20	2	2,100 kg

Type	Part number Flat suction cup	Flat suction cup seal
BLSP 250 NOG	BLSP.253.111.001 NBR black	vulcanised
BLSP 250 NOG	BLSP.253.121.001 NBR grey	vulcanised

Type	Carrying capacity in kg	
	vertical	horizontal
BLSP 250 NOG	138	276

The information about the carrying capacity are theoretical calculated values without a safety factor. The calculation of the horizontal carrying capacity is made of the effective diameter, the low-pressure at a vacuum of 60% and the theoretical friction coefficient. * Tested and values calculated with a plane, dry and dust-free glass surface.

Product picture



Product description

The rotary suction plate Type BLSP 200 BY consists of a support in aluminum with lower flange plate with a diameter of 100 mm and 4 drillings Ø 8,4 mm for mounting the rotary suction plate on the existing device. The upper side has a removable bearing plate with a diameter of 185 mm and is 8 mm thick. There is a V-Ring seal in NBR black for sealing.
In case of wear, the ring seal and the bearing plate can be exchanged quick and cost-saving.

- Total height of construction: 105 mm

Application picture



Technical drawing

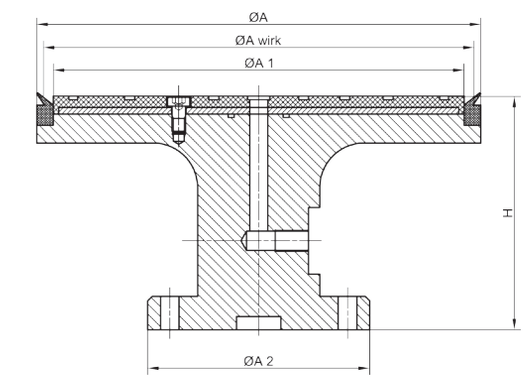

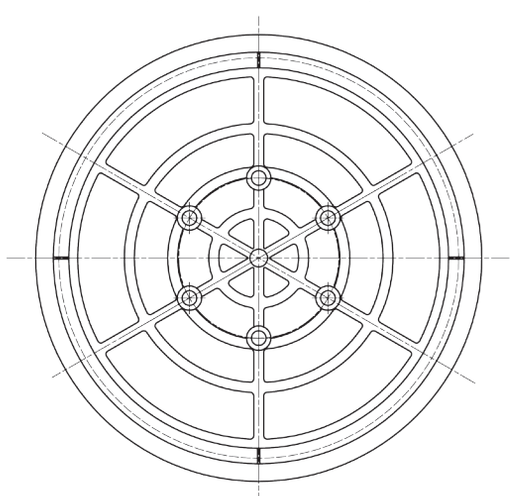

Technical data

Type	ØA	ØA wirk
BLSP 200 BY	200	194

Type	Part number Flat suction cup
BLSP 200 BY	BLSP.204.001 NBR black

Type	Carrying capacity in kg	
	vertical	horizontal
BLSP 200 BY	90	180

Order data / Spare parts

ØA1	ØA2	H	Weight
185	100	105	0,925 kg

V-Ring seal	Bearing plate
BSPS.20.1245 NBR black	BSPS.10.612 NBR black

The information about the carrying capacity are theoretical calculated values without a safety factor. The calculation of the horizontal carrying capacity is made of the effective diameter, the low-pressure at a vacuum of 60% and the theoretical friction coefficient. * Tested and values calculated with a plane, dry and dust-free glass surface.

Product description

Elastic and wear resistant flat suction cup Type BLSP Series L with a small inner volume, suitable for work pieces with a flat and smooth surface especially work pieces like wooden or glass plates or sheet metal. The seal is in NBR black at approx. 50 Shore and replaceable. Several connecting nipples, flow reductions and pin valves are available. Quick and cost-saving change of the seal by means of the clamping clip.

Product picture

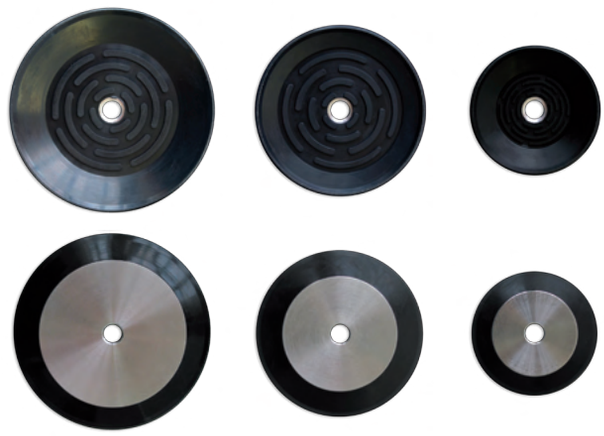

Technical drawing

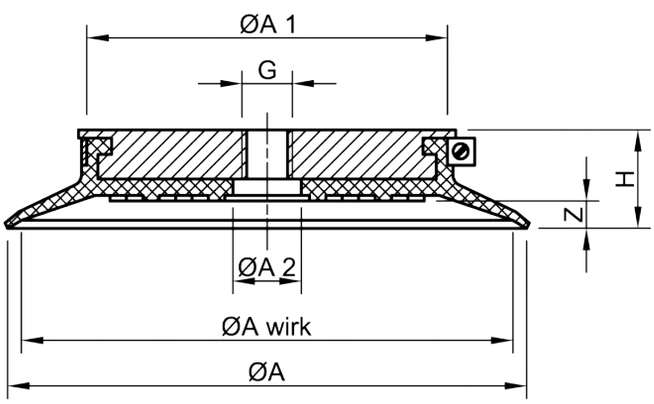

Application picture

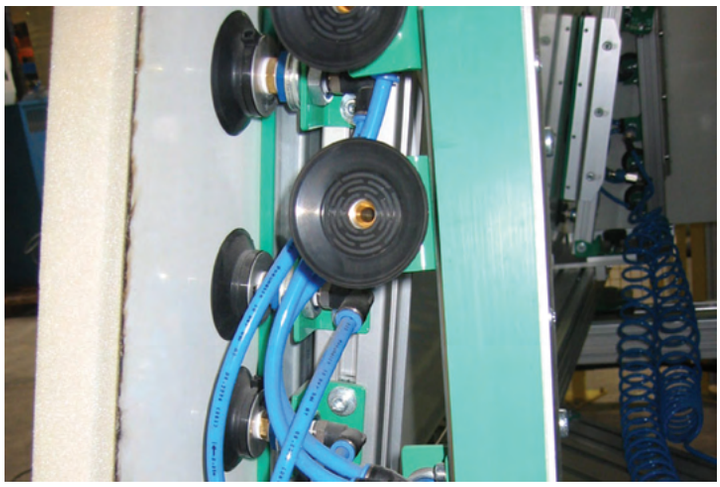

Order data / Spare parts

Technical data

Type	ØA	ØA wirk	ØA1	ØA2	H	Z	Weight
BLSP 60 L	60	54	37,5	12	17,5	5	0,030 kg
BLSP 80 L	80	72	51	12	17	5	0,060 kg
BLSP 95 L	95	90	66	12	18	5	0,102 kg

Type	Part number Flat suction cup	G	Flat suction cup seal	Clamping clip
BLSP 60 L	BLSP.061.111.002	M10 x 1,25	BSPS.10.131	BSPS.11.060
BLSP 80 L	BLSP.081.111.002	M10 x 1,25	BSPS.10.121	BSPS.11.061
BLSP 95 L	BLSP.095.111.002	M10 x 1,25	BSPS.10.134	BSPS.11.062
BLSP 60 L	BLSP.061.111.003	1/8“	BSPS.10.131	BSPS.11.060
BLSP 80 L	BLSP.081.111.003	1/8“	BSPS.10.121	BSPS.11.061
BLSP 95 L	BLSP.095.111.003	1/8“	BSPS.10.134	BSPS.11.062
BLSP 60 L	BLSP.061.111.001	1/4“	BSPS.10.131	BSPS.11.060
BLSP 80 L	BLSP.081.111.001	1/4“	BSPS.10.121	BSPS.11.061
BLSP 95 L	BLSP.095.111.001	1/4“	BSPS.10.134	BSPS.11.062

Type	Carrying capacity in kg	
	vertical	horizontal
BLSP 60 L	7	14
BLSP 80 L	12	24
BLSP 95 L	19	38

The information about the carrying capacity are theoretical calculated values without a safety factor. The calculation of the horizontal carrying capacity is made of the effective diameter, the low-pressure at a vacuum of 60% and the theoretical friction coefficient. * Tested and values calculated with a plane, dry and dust-free glass surface.

Product picture

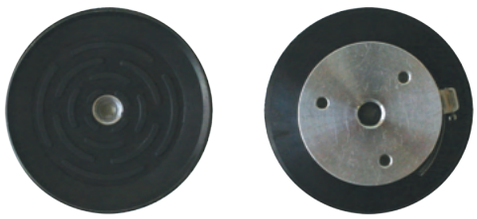

Product description

The flat suction cup Type BLSP 80L-L has a diameter of 80 mm. The aluminum base plate has a 1/8“ inside thread as well as 3 blind holes with a M5 inside thead (3 x 120°) on a pitch circle of 36 mm. With seal in NBR black, clamping clip in stainless steel and a 1/8“ fine filter. Quick and cost-saving change of the seal by means of the clamping clip.

Application picture

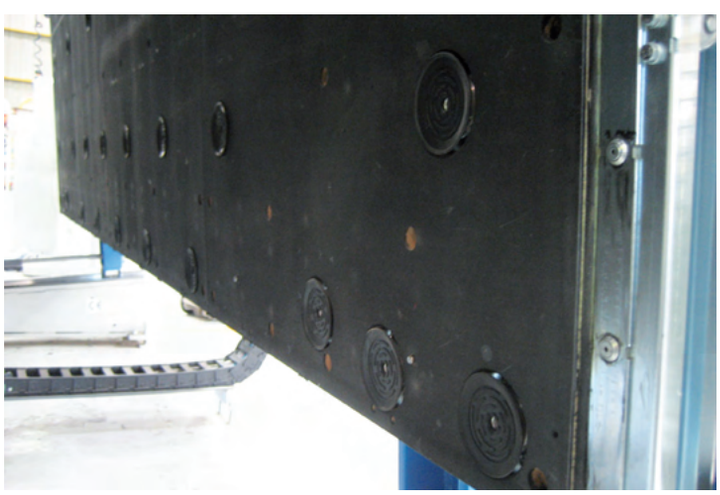

Technical drawing

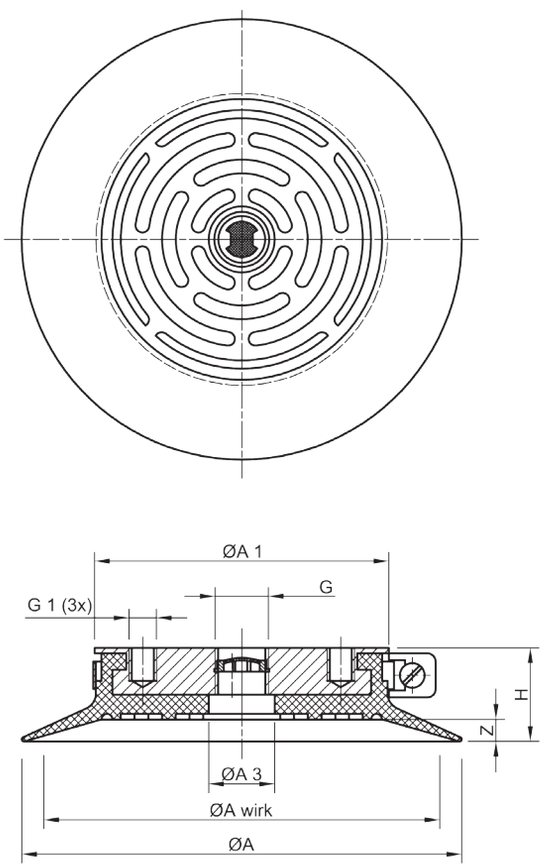

Technical data

Type	ØA	ØA wirk	ØA1	ØA2	G	G1	H	Z	Weight
BLSP 80 L - L	80	72	53,5	12	1/8“	3xM5	17	4	0,068 kg

Type	Part number Flat suction cup	Flat suction cup seal	Clamping clip
BLSP 80 L - L	BLSP.081.111.008 NBR black	BSPS.10.121 NBR black	BSPS.11.061

Type	Carrying capacity in kg	
	vertical	horizontal
BLSP 80 L - L	12	24

The information about the carrying capacity are theoretical calculated values without a safety factor. The calculation of the horizontal carrying capacity is made of the effective diameter, the low-pressure at a vacuum of 60% and the theoretical friction coefficient. * Tested and values calculated with a plane, dry and dust-free glass surface.

Order data / Spare parts

Product description

The flat suction cup Type BLSP 95 R has a diameter of 95 mm and the seal is in PUR at approx. 60 Shore. With aluminum base plate, 1/4“ inside thread and clamping clip in stainless steel.

Product picture



Technical drawing

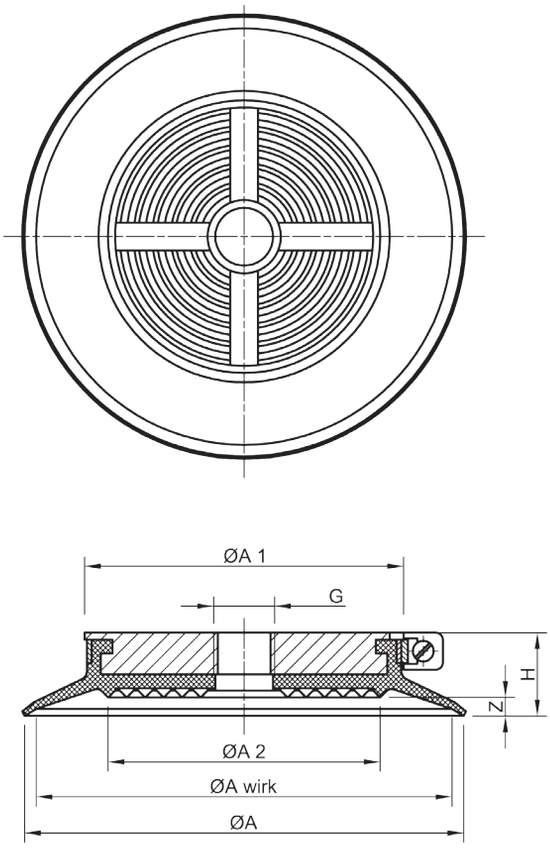

Application picture

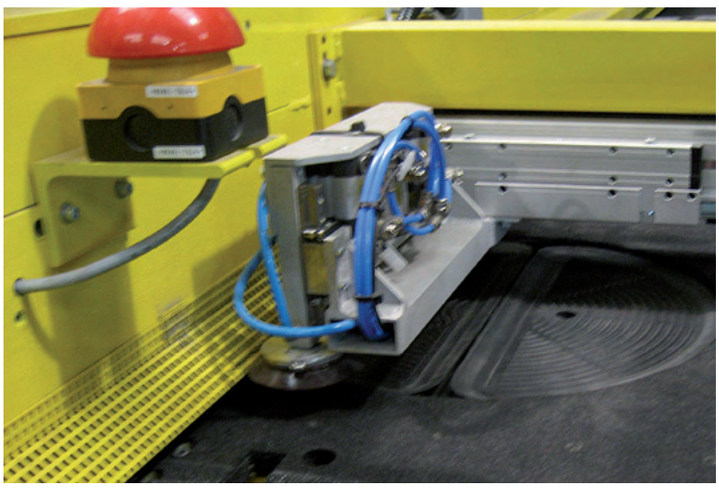

Order data / Spare parts

Technical data

Type	ØA	ØA wirk	ØA1	ØA2	G	H	Z	Weight
BLSP 95 R	95	90	69	59	1/4“	18	4	0,108 kg

Type	Part number Flat suction cup	Flat suction cup seal	Clamping clip
BLSP 95 R	BLSP.095.127.001 PUR brown	BSPS.10.373.01 PUR brown	BSPS.11.062

Type	Carrying capacity in kg	
	vertical	horizontal
BLSP 95 R	19	38

The information about the carrying capacity are theoretical calculated values without a safety factor. The calculation of the horizontal carrying capacity is made of the effective diameter, the low-pressure at a vacuum of 60% and the theoretical friction coefficient. * Tested and values calculated with a plane, dry and dust-free glass surface.

Product picture



Product description

The flat suction cup Type BLSP 95 L - BY has a diameter of 95 mm. There is a theaded pin with SW 17 and M12 inside thread installed on the aluminum base plate. The vacuum connection with a G 1/8“ is mounted on the side. The seal is in NBR black and is used predominantly in the glass industry.
In case of wear, the seal can be exchanged quick and cost-saving by loosening the clamping clip.

Application picture



Technical drawing

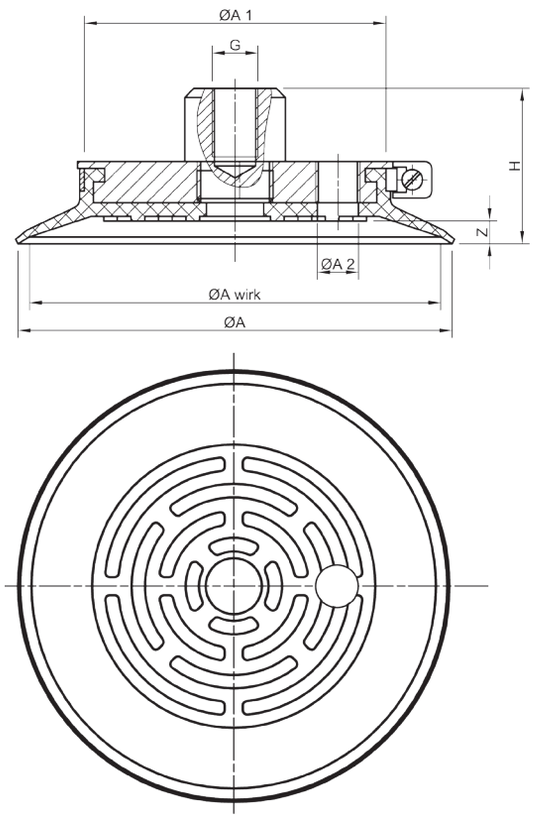

Technical data

Type	ØA	ØA wirk	ØA1	ØA2
BLSP 95 L-BY	95	90	66	9

Type	Part number Flat suction cup
BLSP 95 L-BY	BLSP.095.111.007 NBR black

Type	Carrying capacity in kg	
	vertical	horizontal
BLSP 95 L-BY	19	38

Order data / Spare parts

G	H	Z	Weight
M12	34	5	0,117 kg

Flat suction cup seal	Clamping clip
BSPS.10.134.01 NBR black	BSPS.11.062

The information about the carrying capacity are theoretical calculated values without a safety factor. The calculation of the horizontal carrying capacity is made of the effective diameter, the low-pressure at a vacuum of 60% and the theoretical friction coefficient. * Tested and values calculated with a plane, dry and dust-free glass surface.

Product description

The flat suction cup Type BLSP 60 L-BY has a diameter of 60 mm and the seal is in NBR black. The aluminum base plate has a G1/4“ inside thread where a double threaded pin with 2xG1/4“ is installed. The seal is secured with a clamping clip.
In case of wear, the seal can be exchanged quick and cost-saving by loosening the clamping clip.

Product picture



Technical drawing

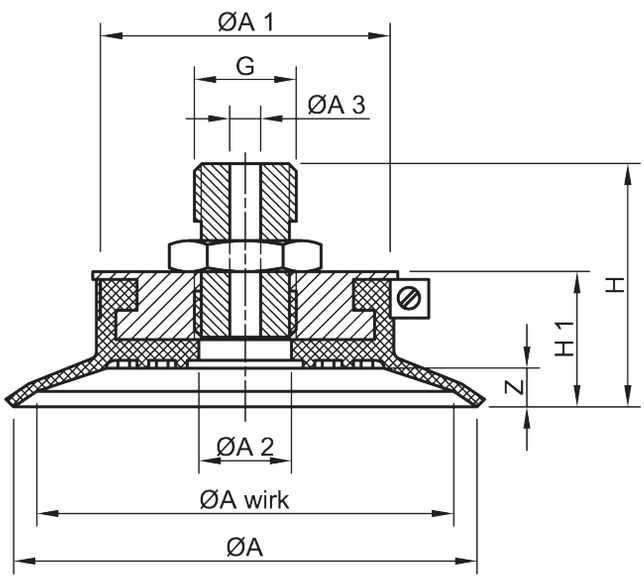

Technical drawing

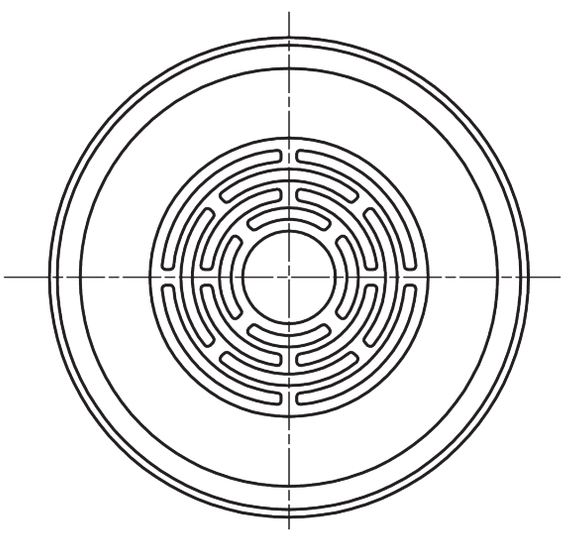

Order data / Spare parts

Type	ØA	ØA wirk	ØA1	ØA2	G	H	Z	Weight
BLSP 60 L-BY	95	90	69	59	1/4“	18	4	0,042 kg

Type	Part number Flat suction cup	Flat suction cup seal	Clamping clip
BLSP 60 L-BY	BLSP.061.111.005 NBR black	BSPS.10.131 NBR black	BSPS.11.060

Type	Carrying capacity in kg	
	vertical	horizontal
BLSP 60 L-BY	7	14

Technical data

The information about the carrying capacity are theoretical calculated values without a safety factor. The calculation of the horizontal carrying capacity is made of the effective diameter, the low-pressure at a vacuum of 60% and the theoretical friction coefficient. * Tested and values calculated with a plane, dry and dust-free glass surface.

Product picture

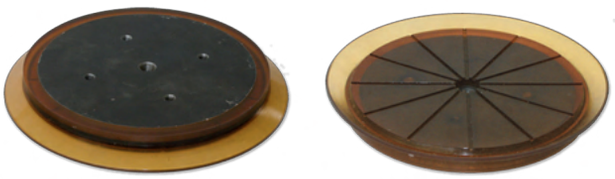

Product description

The flat suction cup Type BLSP 230 L-PU has a diameter of 230 mm. The seal is in PUR at approx. 60 Shore and is vulcanized onto a steel base plate. The seal has a long rubber lip and a groove rubber support. The base plate has a centric hole with a diameter of 20 mm as well as 4 tapped holes for mounting with M8 inside threads 70 x 70 mm.

Technical drawing

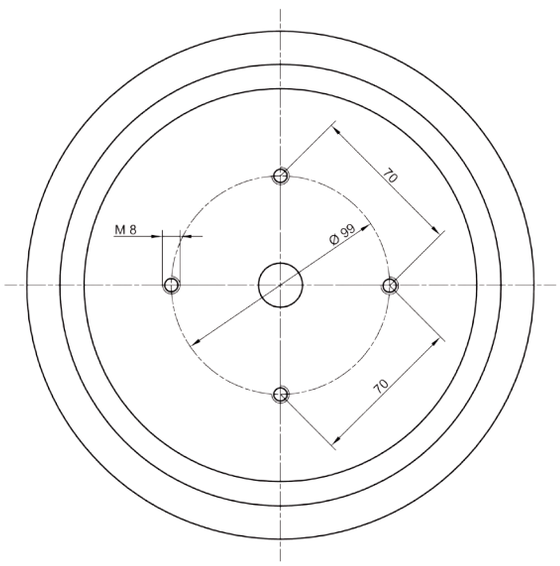

Technical drawing

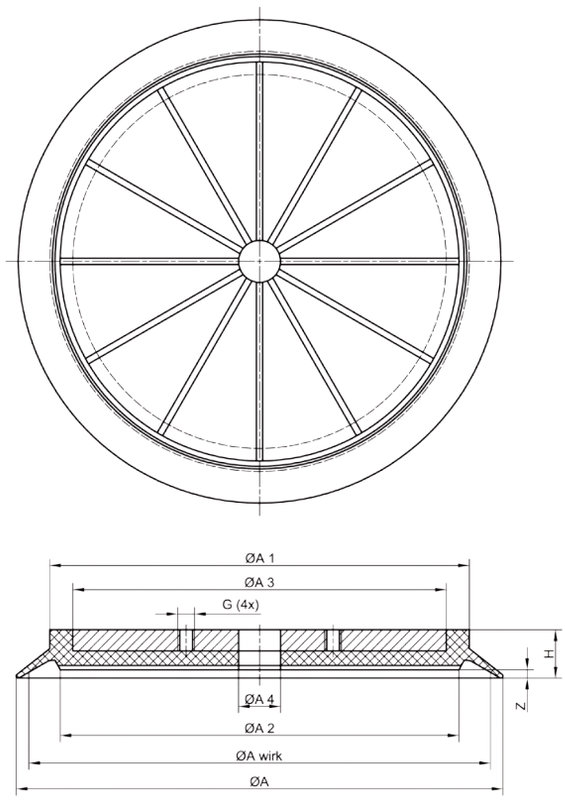

Technical data

Type	ØA	ØA wirk	ØA1	ØA2	ØA3	ØA4	G	H	Z
BLSP 230 L-PU	230	220	200	190	178	20	4xM8	23	4

Type	Part number Flat suction cup	Flat suction cup seal	Weight
BLSP 230 L-PU	BLSP.231.128.003 PUR brown	vulcanised	2,080 kg

Type	Carrying capacity in kg	
	vertical	horizontal
BLSP 230 L-PU	116	232

The information about the carrying capacity are theoretical calculated values without a safety factor. The calculation of the horizontal carrying capacity is made of the effective diameter, the low-pressure at a vacuum of 60% and the theoretical friction coefficient. * Tested and values calculated with a plane, dry and dust-free glass surface.

Order data / Spare parts

Product description

The flat suction cup Type BLSP 160 BY has a diameter of 160 mm. The seal is in NBR black at approx. 50 Shore. The aluminum base plate has two counter sunk holes for a M8 counter sunk bolt as well as a G1/8“ inside thread for the vacuum connection.

Product picture



Technical drawing

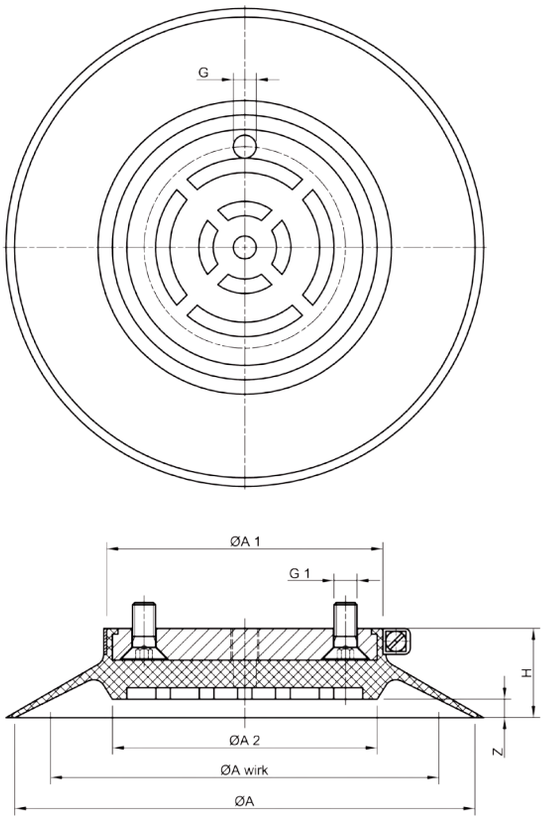

Application picture



Order data / Spare parts

Technical data

Type	ØA	ØA wirk	ØA1	ØA2	G	G1	H	Z	Weight
BLSP 160 BY	160	135	96	92	1/8“	M8	31	6,4	0,367 kg

Type	Part number Flat suction cup	Flat suction cup seal	Clamping clip
BLSP 160 BY	BLSP.161.111.001 NBR black	BSPS.10.443 NBR black	BSPS.11.001

Type	Carrying capacity in kg	
	vertical	horizontal
BLSP 160 BY	43	87

The information about the carrying capacity are theoretical calculated values without a safety factor. The calculation of the horizontal carrying capacity is made of the effective diameter, the low-pressure at a vacuum of 60% and the theoretical friction coefficient. * Tested and values calculated with a plane, dry and dust-free glass surface.

Product picture



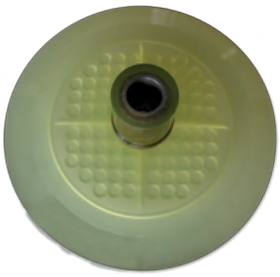

Product description

The flat suction cup Type BSP 200 FGS-V has a diameter of 200 mm. It is made of PUR transparent with 50 shore and vulcanized steel core with M16 inside thread. The inner side has small support naps. The flat suction cup is predominantly used in automatic stacking systems for flat glass.

Application picture



Technical drawing

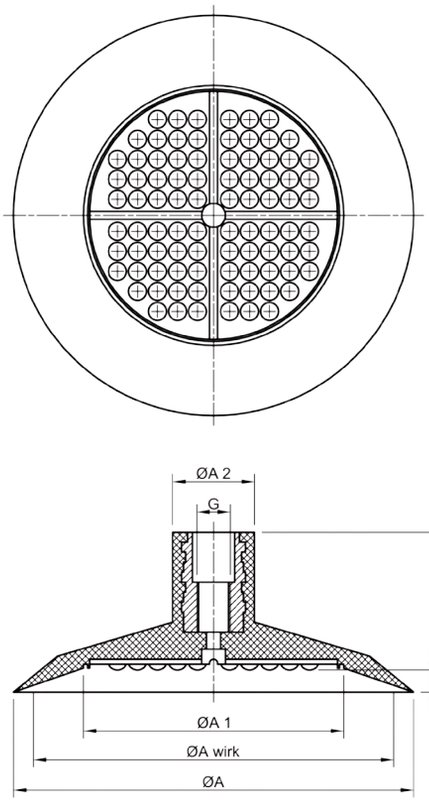

Technical data

Type	ØA	ØA wirk	ØA1	ØA2	G	H	Z	Weight
BSP 200 FGS-V	200	180	130	41	M16 3/8“ 5/8“ UNC	80	11	0,527 kg

Type	Part number Flat suction cup	Steel core
BSP 200 FGS-V	BSPS.10.290 PUR transparent	vulcanised with M16 inside thread
	BSPS.10.290.01 PUR transparent	vulcanised with 3/8“ inside thread
	BSPS.10.290.02 PUR transparent	vulcanised with 5/8“ UNC inside thread

Type	Carrying capacity in kg	
	vertical	horizontal
BSP 200 FGS-V	77	155

The information about the carrying capacity are theoretical calculated values without a safety factor. The calculation of the horizontal carrying capacity is made of the effective diameter, the low-pressure at a vacuum of 60% and the theoretical friction coefficient. * Tested and values calculated with a plane, dry and dust-free glass surface.

Order data / Spare parts

Product description

The flat suction cup Type BSC - VAS is in diameter 55 mm and 75 mm available. The suction up has an vulcanized aluminum support with key section SW 17 and G 1/4“ out-side thread for installation. On the bottom side there is an internal hexagon section again usable for installing the suction cup by means of an hexagon key.

Product picture



Technical drawing

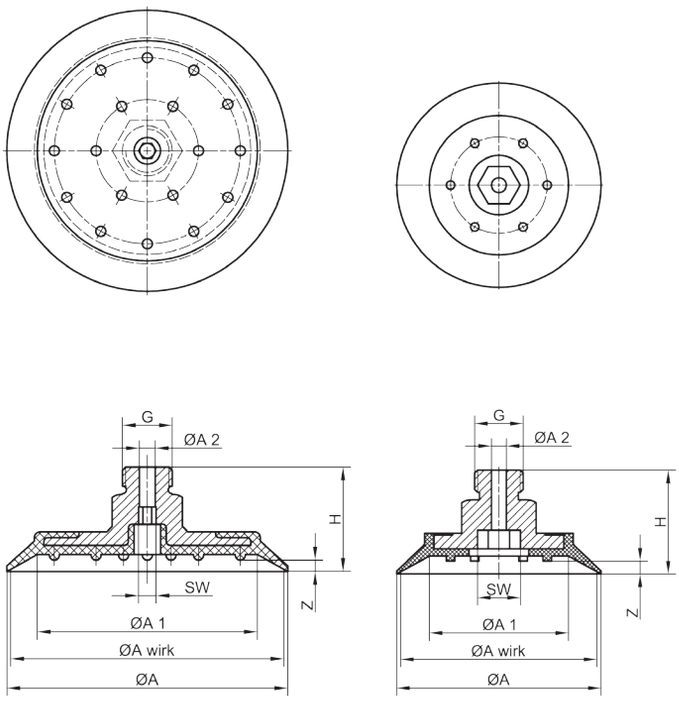

Application picture

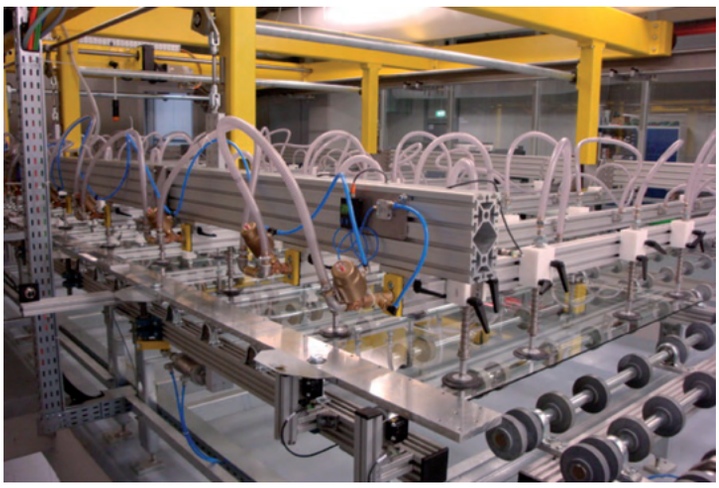

Order data / Spare parts

Technical data

Type	ØA	ØA wirk	ØA1	ØA2	G	SW	H	Z	Weight
BSC 55 VAS	55	53	35	4	1/4“	10	28	3,5	0,056 kg
BSC 75 VAS	74	72	58	4,2	1/4“	4	27,5	3	0,076 kg

Type	Part number Flat suction cup	Flat suction cup seal
BSC 55 VAS	BSC.0.055.1.00 NBR black	vulcanised
BSC 75 VAS	BSC.0.075.1.00 NBR black	vulcanised

Type	Carrying capacity in kg		
	vertical	horizontal	
BSC 55 VAS	6	13	The information about the carrying capacity are theoretical calculated values without a safety factor. The calculation of the horizontal carrying capacity is made of the effective diameter, the low-pressure at a vacuum of 60% and the theoretical friction coefficient. * Tested and values calculated with a plane, dry and dust-free glass surface.
BSC 75 VAS	12	24	

Product picture



Product description

Hard and wear resistant suction cup Type BSP Series FOR with a small inner volume, suitable for vacuum clamping in Forvet CNC-drilling and grinding machines. The seal is in NBR black at approx. 65 Shore. The seal is vulcanized onto an aluminum base plate, which is mounted by means of screws to the machine table.

Application picture

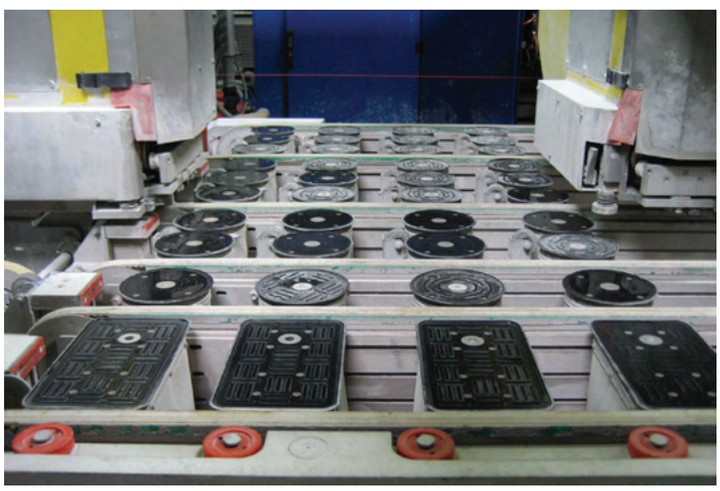

Technical drawing

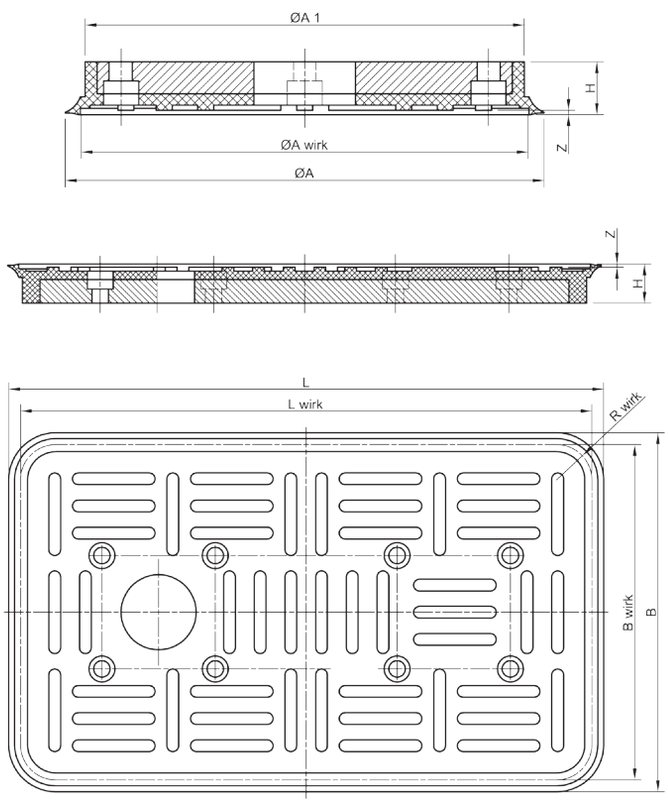

Technical data

Type	ØA	ØA wirk	ØA1	L	B	L wirk	B wirk	R wirk	H	Z
BSP 150 FOR	150	140	137	-	-	-	-	-	16,6	1,4
BSP 140x240 FOR	-		-	252	152	242	142	15	16,6	1,4

Type	Part number Flat suction cup	Flat suction cup seal	Weight
BSP 150 FOR	BSPS.10.339 NBR black	vulcanised	0,400 kg
BSP 140x240 FOR	BSPS.10.340 NBR black	vulcanised	0,900 kg

Type	Tension force in kg	
	vertical	horizontal
BSP 150 FOR	47	94
BSP 140x240 FOR	102	205

The information about the carrying capacity are theoretical calculated values without a safety factor. The calculation of the horizontal carrying capacity is made of the effective diameter, the low-pressure at a vacuum of 60% and the theoretical friction coefficient. * Tested and values calculated with a plane, dry and dust-free glass surface.

Order data / Spare parts

Product description

The flat suction cup Type BLSP 95 BE has a diameter of 95 mm and a short rubber lip. The seal has support bars in NK black at approx. 55 Shore. Please note that the seal is thinner in the middle section (1,3 mm deep x Ø 40 mm).
There is an aluminum ring inlayed with the measures Ø 80 mm x 42 mm x 1,5 mm. Additionally there are three counter sunk holes with each Ø 4,4 mm and a sinkhole on the rubber side.

Product picture



Technical drawing

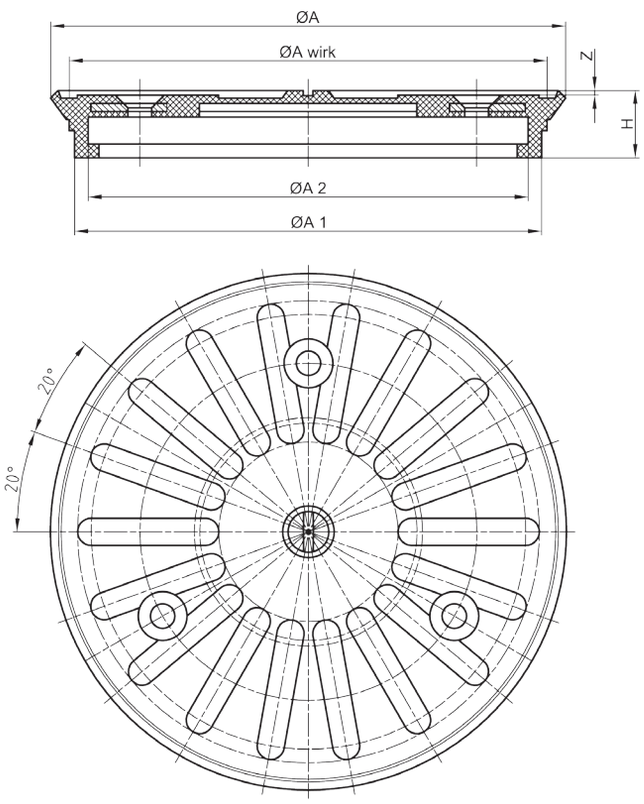

Application picture

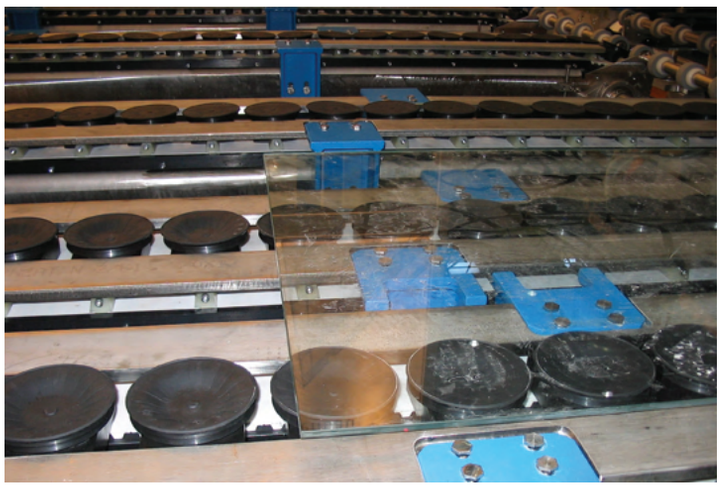

Order data / Spare parts

Type	ØA	ØA wirk	ØA1	ØA2	H	Z	Weight
BLSP 95 BE	95	88	86	81	12,4	0,5	0,045 kg

Type	Part number Flat suction cup	Flat suction cup seal
BLSP 95 BE	BSPS.10.350.05 NBR black	vulcanised

Type	Tension force in kg	
	vertical	horizontal
BLSP 95 BE	18	37

Technical data

The information about the carrying capacity are theoretical calculated values without a safety factor. The calculation of the horizontal carrying capacity is made of the effective diameter, the low-pressure at a vacuum of 60% and the theoretical friction coefficient. * Tested and values calculated with a plane, dry and dust-free glass surface.

Product description	Page
Type BSP 285 CEM	**59**
Type BSP Series BAV	**60**
Type BSP Series BAV	**61**
Type BSP Series TM	**62**
Type BSC Series C - Intermac (old)	**63**
Type BSP Series IMC - Intermac (new)	**64**
Support block for Type BSP Series IMC - Intermac (new)	**65**
Type BSP Series CO	**66**
Type BSP 316 SAP	**67**
Type BSP 105 HG	**68**
Type BSP Series NO	**69**
Type BSP Series VS	**70**
Type BSP Series VS-NO	**71**
Type BSP 200 FGS	**72**
Accessories for Type BSP 200 FGS	**73**

Product description

Flat suction cup seal type BSP 285 CEM Ø 285 mm in NBR black at 50 Shore. For mounting by means of a inner steel ring and 6 screws onto the base plate. The seal has a medium length of rubber lip and the special inner support will give a better friction. In case of waer, the seal can be exchanged quick and cost saving by loosening the inner steel ring.

Product picture



Technical drawing

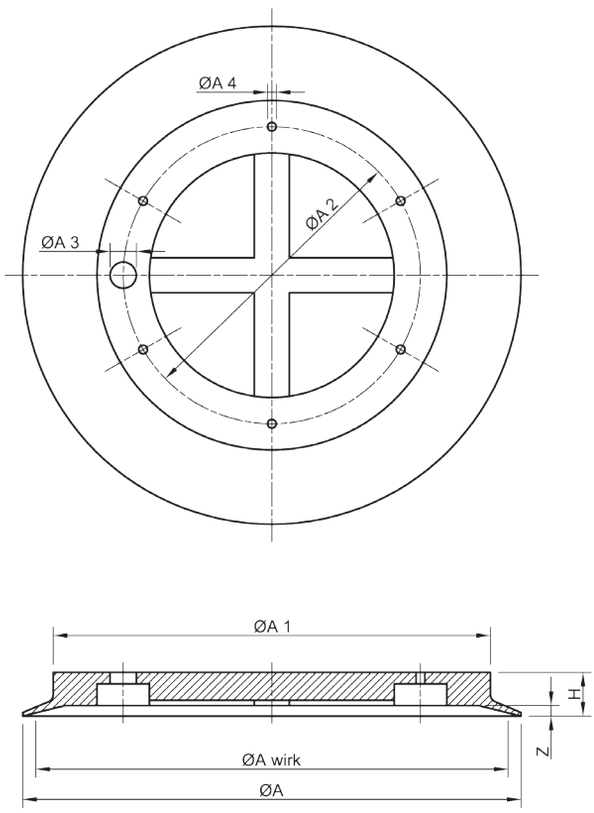

Application picture



Order data / Spare parts

Technical data

Type	ØA	ØA wirk	ØA1	ØA2	ØA3	ØA4	H	Z	Weight
BSP 285 CEM	285	270	250	170	15	5	25	6	1,170kg

Type	Part number Flat suction cup seal	Carrying capacity in kg	
		vertical	horizontal
BSP 285 CEM	BSPS.10.638 NBR black	175	350

The information about the carrying capacity are theoretical calculated values without a safety factor. The calculation of the horizontal carrying capacity is made of the effective diameter, the low-pressure at a vacuum of 60% and the theoretical friction coefficient. * Tested and values calculated with a plane, dry and dust-free glass surface.

Product picture



Product description

The flat suction cup seals Type BSP Series BAV has five different seals with a small inner volume, suitable for vacuum clamping in CNC-milling machines, especially for Bavelloni clamping blocks. The suction cup seals are in NBR black at approx. 75 Shore. The seal is attached onto the clapming block and its residual stress will keep it in place. As a result, a quick and cost-saving change is possible.

Technical drawing

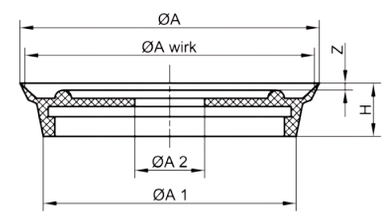

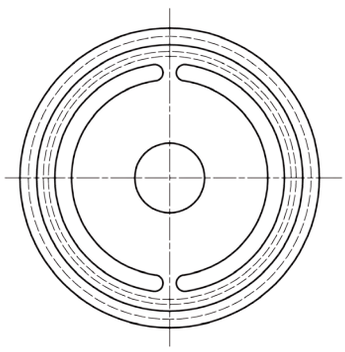

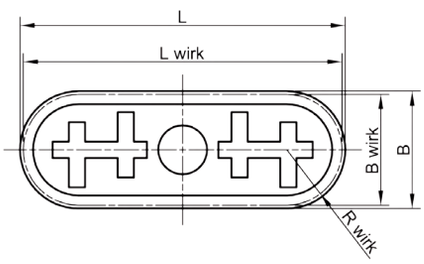

Technical drawing

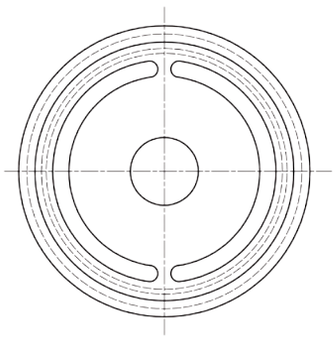

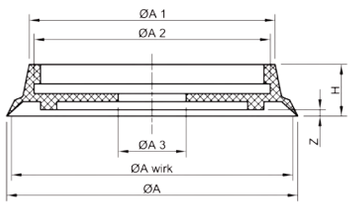

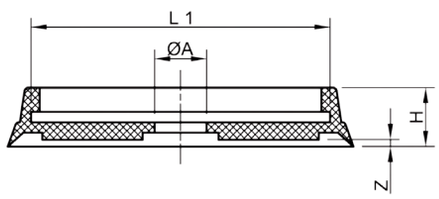

Technical data

Type	ØA	ØA wirk	ØA1	ØA2	Z	L	L wirk	B	B wirk	H	R wirk	Weight
40 BAV	42	40	37	12	2,5	-	-	-	-	14	-	0,008 kg
90 BAV Vers. 1	90	87	76	21	2,0	-	-	-	-	16	-	0,034 kg
90 BAV Vers. 2	90	87	76	21	2,0	-	-	-	-	16	-	0,034 kg
160 BAV	165	158	134	25	4,5	-	-	-	-	28	-	0,153 kg
255 BAV	255	240	212	26	5,7	-	-	-	-	37,2	-	0,500 kg
36 x 100 BAV	15	-	-	-	2	100	98	36	34	17	17	0,024 kg

Application picture

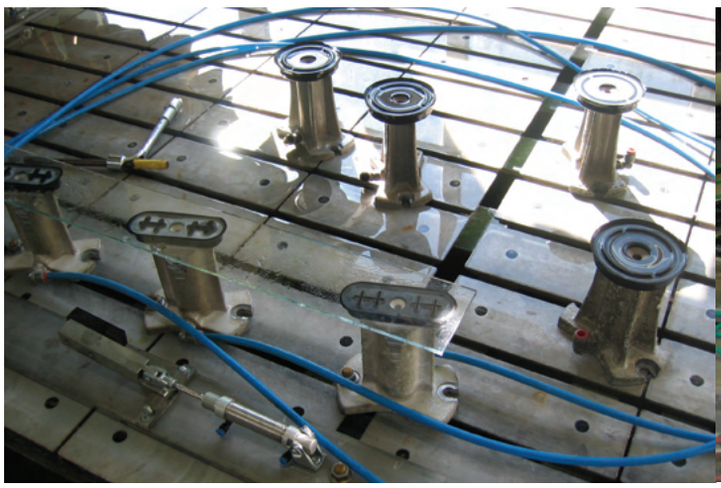

Application picture

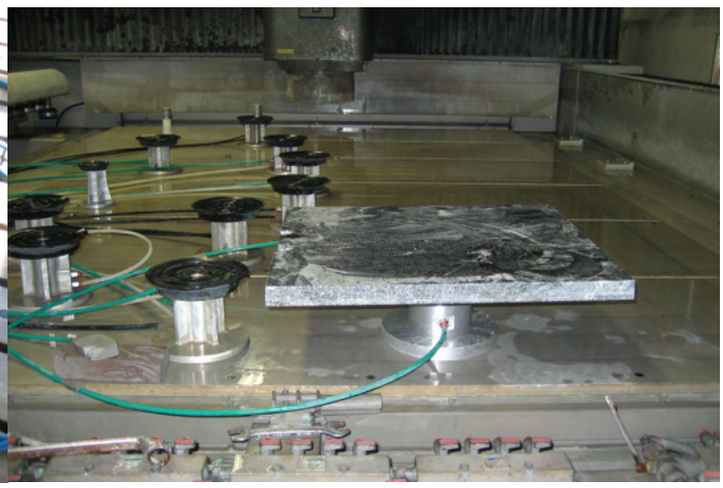

Order data / Spare parts

Technical data

Type	Part number Spare seal	Tension force	
		vertical	horizontal
40 BAV	BSPS.10.234 NBR black	3,00 kg	7,00 kg
90 BAV S1/S2	BSPS.10.201 NBR black	18,00 kg	36,00 kg
160 BAV	BSPS.10.235 NBR black	59,00 kg	119,00 kg
255 BAV	BSPS.10.282 NBR black	138,00 kg	276,00 kg
36 x 100 BAV	BSPS.10.233 NBR black	7,00 kg	14,00 kg

Technical drawing

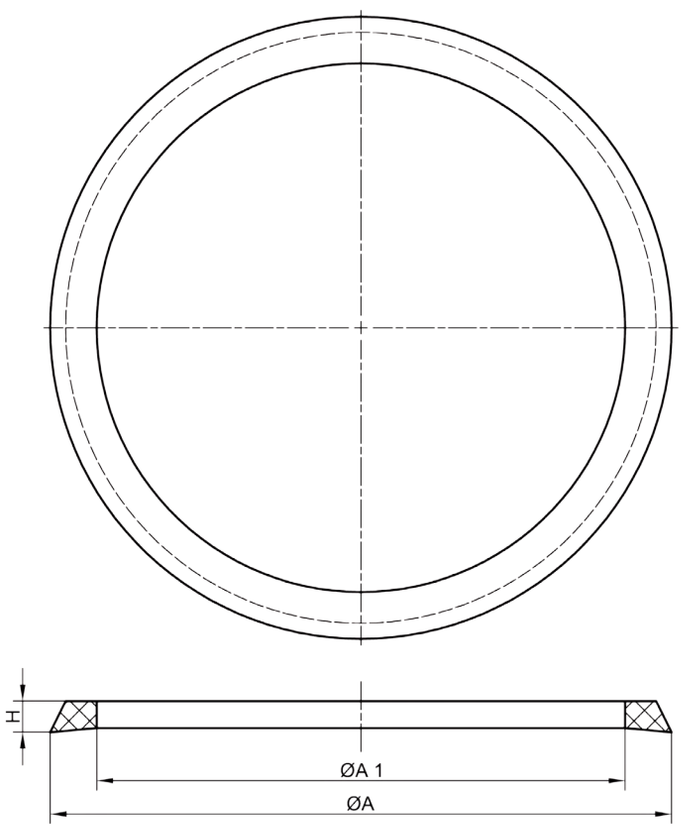

Product picture



Order data / Spare parts

Type	Sealing ring for clamping block		
90 BAV	BSPS.10.399 NBR black		
160 BAV	BSPS.10.605 NBR black		
Type	**ØA**	**ØA1**	**H**
90 BAV	100	85	5
160 BAV	154	140	5

Product picture



Product description

The flat suction cup seals Type BSP Series TM has four different sizes. The seals are in NBR black at approx. 70 Shore with rubber lip and centric hole. Suitable for the Tecnometal clamping block.

Application picture

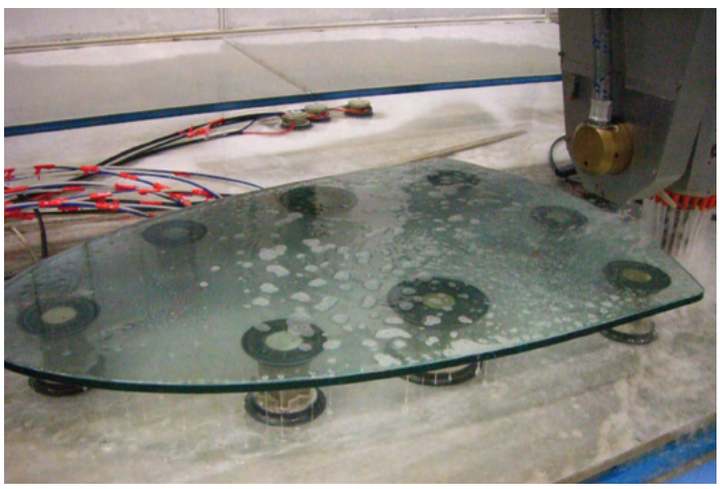

Technical drawing

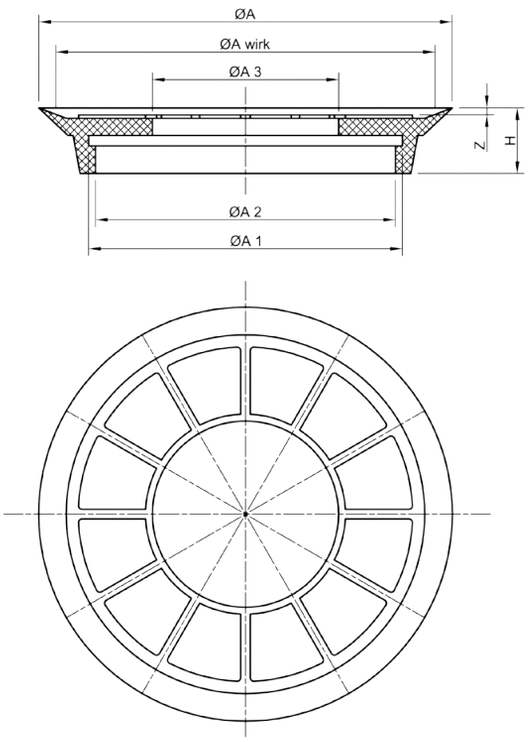

Technical data

Order data / Spare parts

Type	ØA	ØA wirk	ØA1	ØA2	ØA3	H	Z
BSP 66 TM	66	60	45	41	20	19	3
BSP 86 TM	86	80	64	60	34	19	3
BSP 120 TM	120	110	92	87	54	19	3
BSP 160 TM	162	150	131	123	54	19	3

Type	Part number Flat suction cup seal	Type	Tension force		Weight
			vertical	horizontal	
BSP 66 TM	BSPS.10.422 NBR black	BSP 66 TM	8,00 kg	17,00 kg	0,028 kg
BSP 86 TM	BSPS.10.423 NBR black	BSP 86 TM	15,00 kg	30,00 kg	0,047 kg
BSP 120 TM	BSPS.10.424 NBR black	BSP 120 TM	29,00 kg	58,00 kg	0,065 kg
BSP 160 TM	BSPS.10.425 NBR black	BSP 160 TM	54,00 kg	108,00 kg	0,146 kg

The information about the carrying capacity are theoretical calculated values without a safety factor. The calculation of the horizontal carrying capacity is made of the effective diameter, the low-pressure at a vacuum of 60% and the theoretical friction coefficient. * Tested and values calculated with a plane, dry and dust-free glass surface.

Product description

The former Intermac Series C has five different hard and wear resistant seals with a small inner volume, a nap rubber support and a centric hole which is suitable for vacuum clamping in CNC-milling machines. The suction cup seals are in NBR black at approx. 60 Shore. The seal is attached onto the base plate and its residual stress will keep it in place. As a result, a quick and cost-saving change is possible.

Product picture



Technical drawing

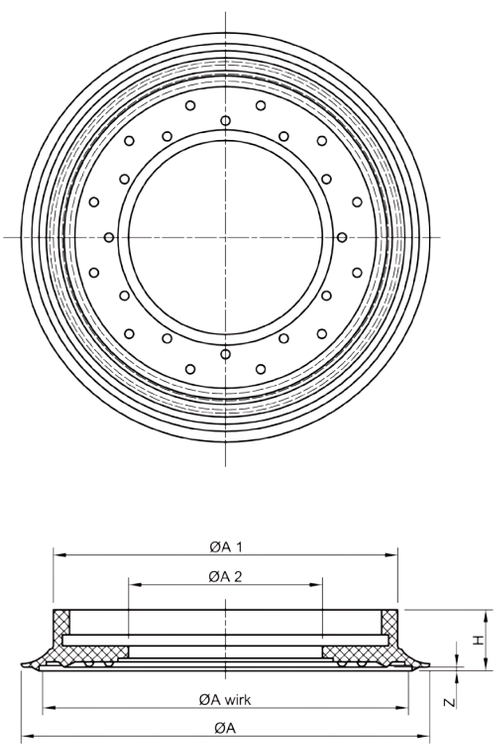

Application picture



Order data / Spare parts

Type	ØA	ØA wirk	ØA1	ØA2	H	Z	Tension force		Weight
							vertical	horizontal	
BSC 65 C	65	55	50	14	16	1	7,00 kg	14,00 kg	0,018 kg
BSC 85 C	85	77	68	28	17	1	14,00 kg	28,00 kg	0,037 kg
BSC 114 C	114	102	96	54	17	1	24,00 kg	49,00 kg	0,044 kg
BSC 160 C	160	148	130	70	22	2	52,00 kg	105,00 kg	0,125 kg

Type	Part number
Supporting block Series C Ø 22 x 9,4	BSPS.10.374

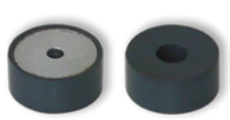

Technical data

Type	Part number Flat suction cup seal
BSC 65 C	BSPS.10.075 NBR black
BSC 85 C	BSPS.10.076 NBR black
BSC 114 C	BSPS.10.082 NBR black
BSC 114 C	BSPS.10.082.01 NBR black (3 holes)
BSC 160 C	BSPS.10.180.01 NBR black (4 holes)

Product picture

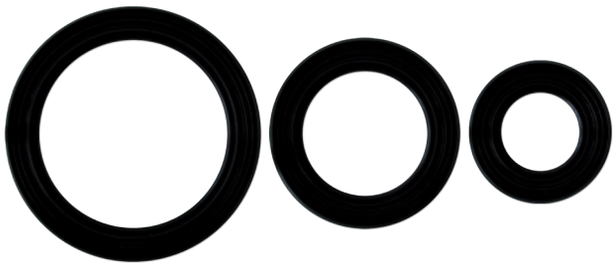

Product description

The new series IMC - Intermac - has three different hard and wear resistant seals, suitable for vacuum clamping in CNC grinding machines. The ring seals are in NBR black at approx. 60 Shore. This seals are predominantly used with the suitable support blocks in the glass industry. The seal is attached onto the clapming block and its residual stress will keep it in place.

Application picture



Technical drawing

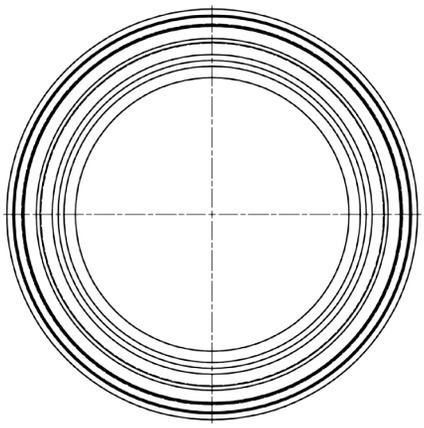

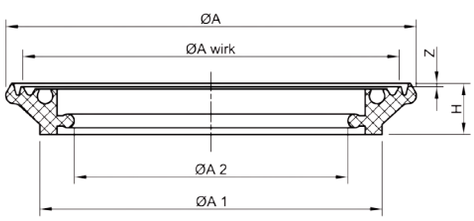

Technical data

Type	ØA	ØA wirk	ØA1	ØA2	H	Z	Weight
BSP 90 IMC	90	80	70	50	15	1	0,032 kg
BSP 120 IMC	120	110	100	80	15	1	0,048 kg
BSP 160 IMC	160	150	140	120	15	1	0,067 kg

Order data / Spare parts

Type	Part number Flat suction cup seal	Type	Tension force	
			vertical	horizontal
BSP 90 IMC	BSPS.10.409 NBR black	BSP 90 IMC	15,00 kg	30,00 kg
BSP 120 IMC	BSPS.10.410 NBR black	BSP 120 IMC	29,00 kg	58,00 kg
BSP 160 IMC	BSPS.10.411 NBR black	BSP 160 IMC	54,00 kg	108,00 kg

The information about the carrying capacity are theoretical calculated values without a safety factor. The calculation of the horizontal carrying capacity is made of the effective diameter, the low-pressure at a vacuum of 60% and the theoretical friction coefficient. * Tested and values calculated with a plane, dry and dust-free glass surface.

Product description

This support plates for the Type BSP series IMC are vulcanized onto an aluminum base plate. The support plates are in NBR black at approx. 90 Shore and have 3 countersunk holes with a diameter of 5,5 mm as well as a Ø 10 mm hole for the vacuum connection.

Product picture



Technical drawing

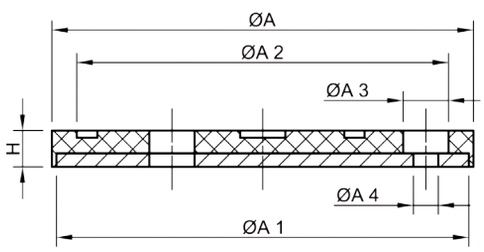

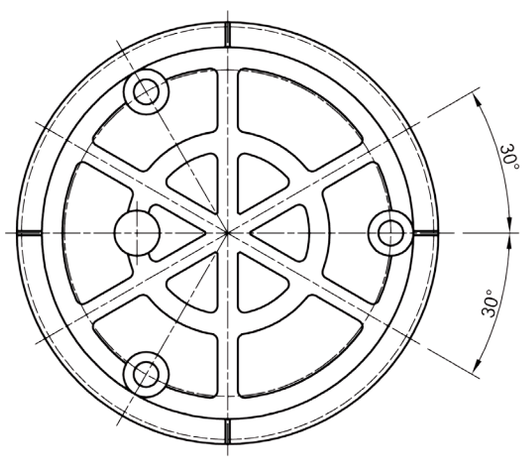

Application picture

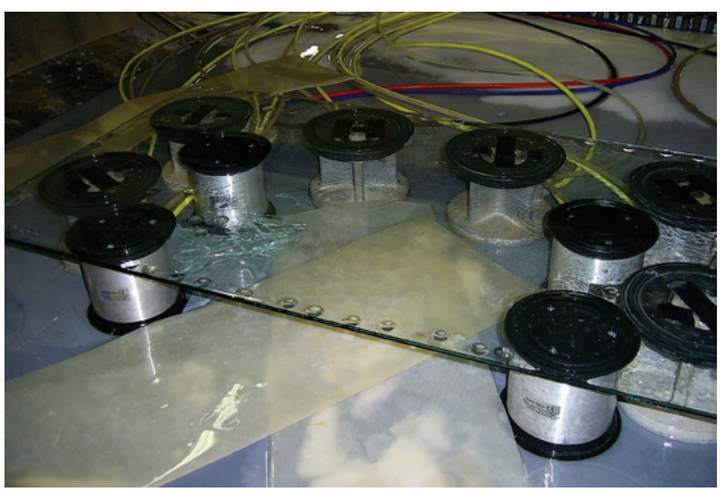

Order data / Spare parts

Technical data

Support block	ØA	ØA1	ØA2	ØA3	ØA4	H	Weight
Type 90 IMC (63 x 8)	63	61	52	10	5,5	8	0,040 kg
Type 120 IMC (93 x 8)	93	91	82	10	5,5	8	0,091 kg
Type 160 IMC (135 x 8)	135	130	121	10	5,5	8	0,192 kg

Type	Part number support block
Type 90 IMC (63 x 8)	BSPS.10.445 NBR black
Type 120 IMC (93 x 8)	BSPS.10.446 NBR black
Type 160 IMC (135 x 8)	BSPS.10.447 NBR black

Product picture



Product description

This special suction cup seal Type BSP series CO is often used in automatic stacking systems. The robust and massive seal is in NBR black at approx. 50 Shore and is suitable for a slightly rough surface. The seal is suitable for heavy glass plates. The suspension bolt and the base plate can be made to your specification. Quick change of the rubber seal by loosening the four screws from the inside of the seal.

Application picture

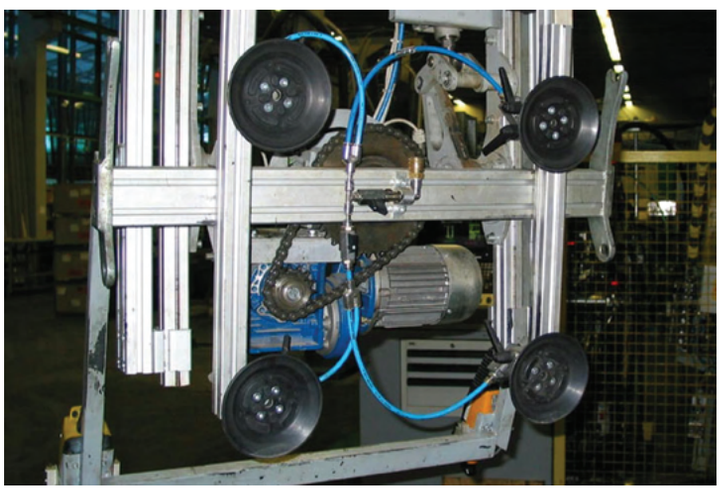

Technical drawing

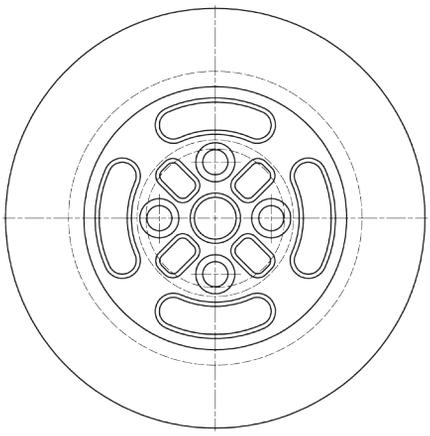

Technical data

Type	ØA	ØA wirk	ØA1	ØA2	ØA3	C	H	Z	Weight
150 CO	150	146	105	15	9 (4x 90°)	14	32,5	9	0,480 kg
200 CO	200	185	140	13	9	20	37	15	1,000 kg

Type	Part number Flat suction cup seal	Inner steel core
150 CO	BSPS.10.402 NBR black	vulcanised
200 CO	BSPS.10.366 NBR black	vulcanised

Type	Carrying capacity in kg		Order data / Spare parts
	vertical	horizontal	
150 CO	51	102	The information about the carrying capacity are theoretical calculated values without a safety factor. The calculation of the horizontal carrying capacity is made of the effective diameter, the low-pressure at a vacuum of 60% and the theoretical friction coefficient. * Tested and values calculated with a plane, dry and dust-free glass surface.
200 CO	82	164	

Product description

Flat ring seal Type BSP 316 SAP for mounting onto the base plate. The rubber seal has a diameter of 316 mm, is in NBR black at approx. 50 Shore and has support ribs which avoid a deformation of the work piece. The rubber lip which seals against the work piece is short and a quick ventilation for high stacking speed is assured. Only the rubber seal needs to be changed in case of wear.

Product picture



Technical drawing

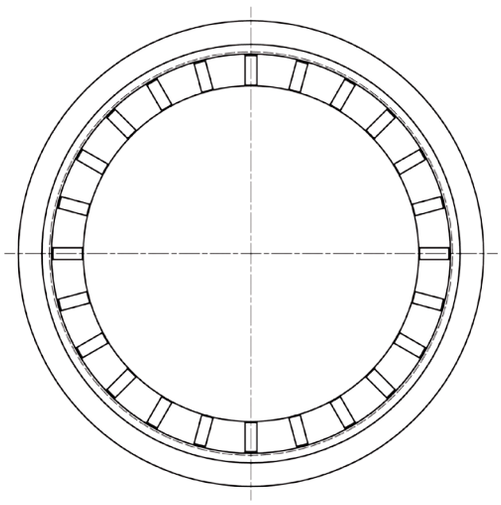

Application picture

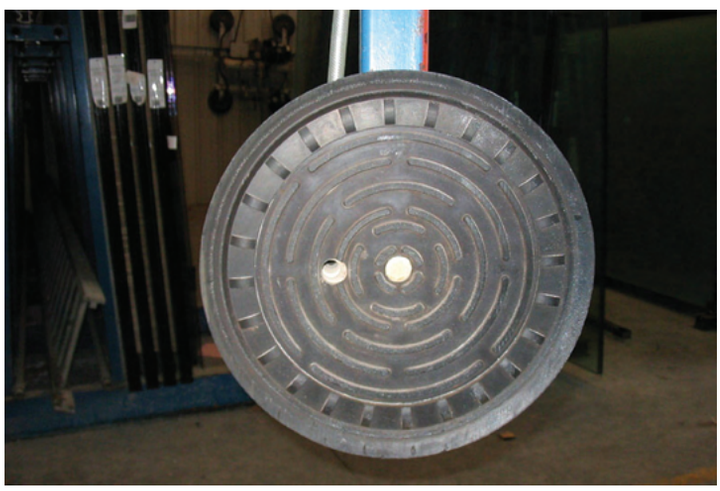

Order data / Spare parts

Type	ØA	ØA wirk	ØA1	ØA2	ØA3	H	Z	Weight
BSP 316 SAP	316	290	290	284	234	32	7	0,550 kg

Type	Part number Flat suction cup seal	Inner steel core
BSP 316 SAP	BSPS.10.349 NBR black	vulcanised

Type	Carrying capacity in kg	
	vertical	horizontal
BSP 316 SAP	202	404

Technical data

The information about the carrying capacity are theoretical calculated values without a safety factor. The calculation of the horizontal carrying capacity is made of the effective diameter, the low-pressure at a vacuum of 60% and the theoretical friction coefficient. * Tested and values calculated with a plane, dry and dust-free glass surface.

Product picture



Product description

The flat suction cup seal Type BSP 105 HG has a diameter of 105 mm and is in NBR black at approx. 75 Shore. The seal has an inner rubber support and a long rubber lip. The centric hole has a diameter of 12,5 mm.

The former support can be restored with the accessories parts. The support BSCN-HG.105.01 and the clamping plate BSCN-HG.105.02 can be ordered in an assembly-kit.

Technical drawing

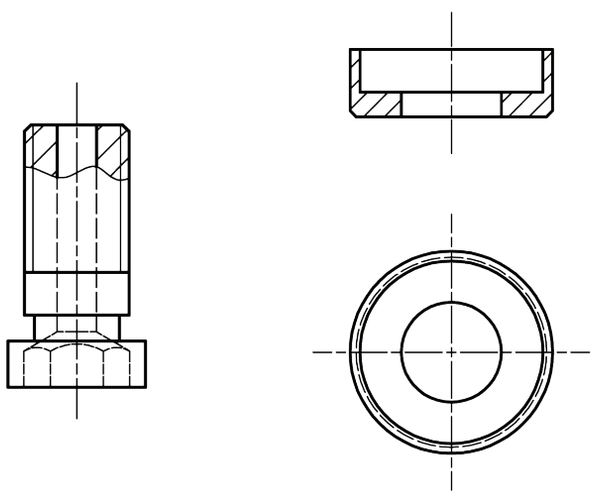

Technical drawing

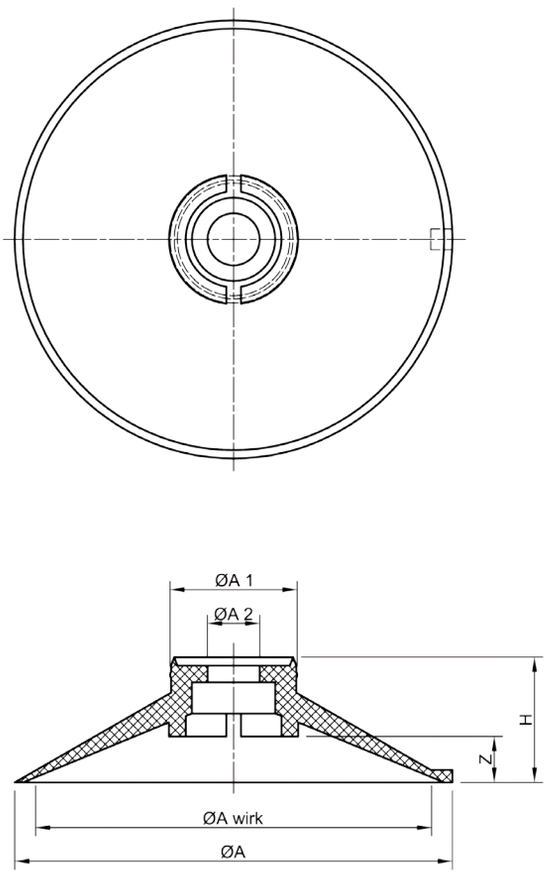

Technical data

Type	ØA	ØA wirk	ØA1	ØA2	ØA3	H	Z	Weight
BSP 105 HG	105	180	101	30,5	12,5	30	11	0,130 kg

Type	Part number Flat suction cup seal	Collet M16	Ring	BSCN-HG Kit
BSP 105 HG	BSPS.10.444 NBR black	BSCN-HG.105.01	BSCN-HG.105.02	BSCN-HG.105.00

Type	Carrying capacity in kg	
	vertical	horizontal
BSP 105 HG	21	43

Order data / Spare parts

The information about the carrying capacity are theoretical calculated values without a safety factor. The calculation of the horizontal carrying capacity is made of the effective diameter, the low-pressure at a vacuum of 60% and the theoretical friction coefficient. * Tested and values calculated with a plane, dry and dust-free glass surface.

Product description

The flat suction cup seal Type BSP series NO is in NBR grey at approx. 50 Shore. The seal has a diameter of 160 or 250 mm and a nap rubber supprt as well as a centric hole.

Product picture

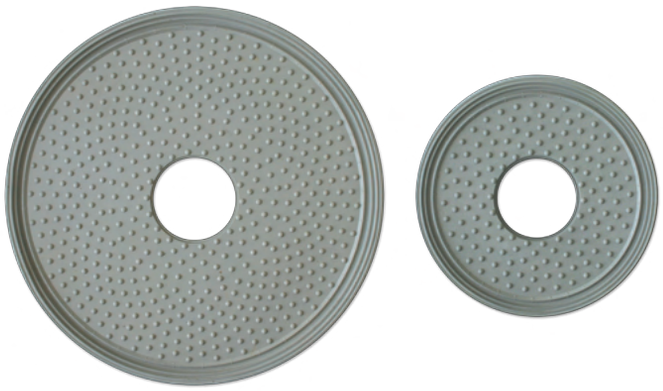

Technical drawing

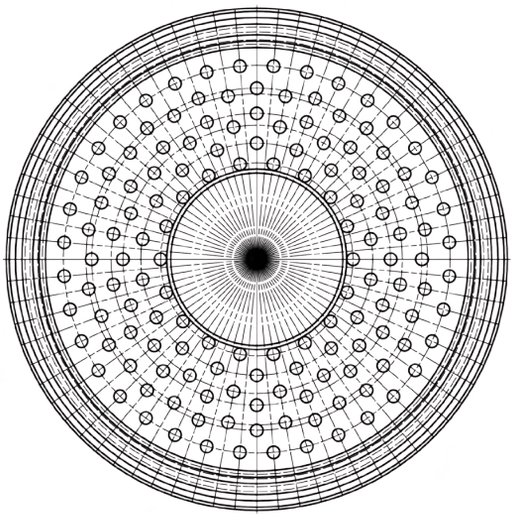

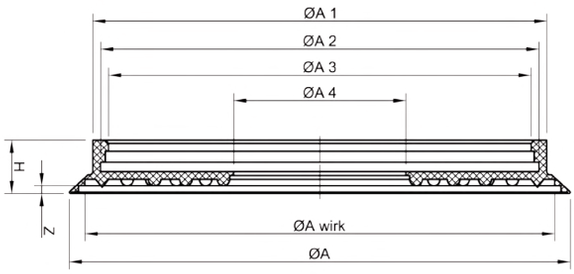

Application picture

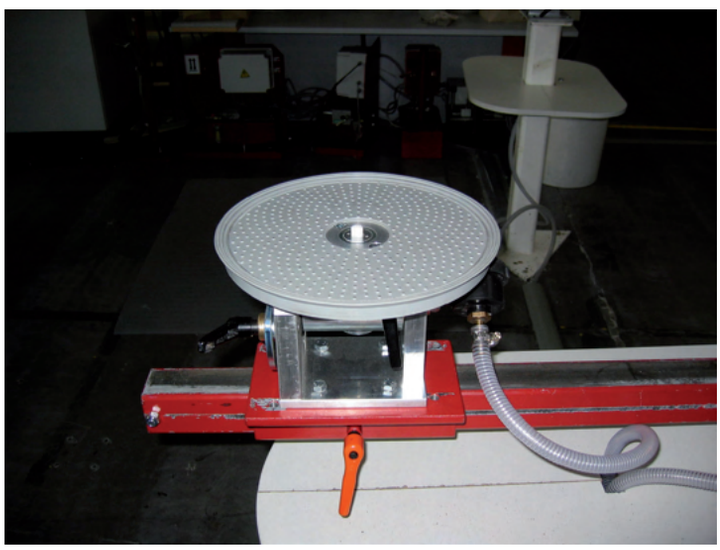

Order data / Spare parts

Technical data

Type	ØA	ØA wirk	ØA1	ØA2	ØA3	ØA4	H	Z	Weight
BSP 160 NO	160	150	145	140	135	55	17	2,5	0,091 kg
BSP 250 NO	250	238	235	230	225	53	17	2,5	0,218 kg

Type	Part number Flat suction cup seal	Carrying capacity in kg	
		vertical	horizontal
BSP 160 NO	BSPS.10.099 NBR grey	54	108
BSP 250 NO	BSPS.10.100 NBR grey	136	272

The information about the carrying capacity are theoretical calculated values without a safety factor. The calculation of the horizontal carrying capacity is made of the effective diameter, the low-pressure at a vacuum of 60% and the theoretical friction coefficient. * Tested and values calculated with a plane, dry and dust-free glass surface.

Product picture

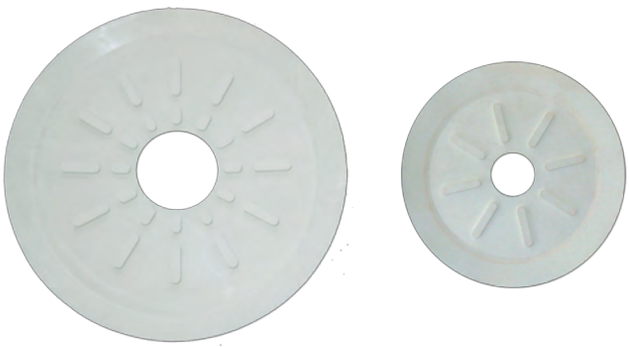

Product description

This special suction cup seal of the Type BSP series VS is often used in automatic stacking systems in the glass industry. It is a robust and massive seal in NBR grey at approx. 45 Shore and is suitable for glass plates. The base plate and the suspension can be supplied according to the customers specification. Quick and cost-saving change of the seal.

Application picture



Technical drawing

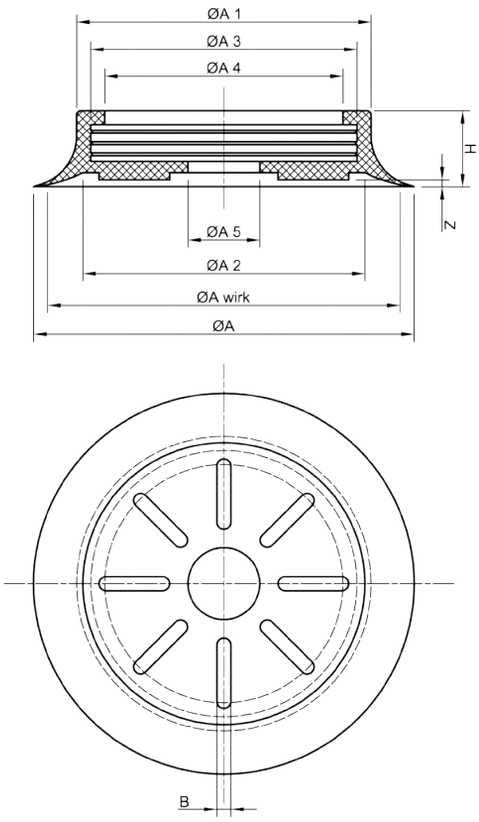

Technical data

Type	ØA	ØA wirk	ØA1	ØA2	ØA3	ØA4	ØA5	B	H	Z	Weight
BSP 130 VS	130	125	105	100	95	85	31	5	27	2,5	0,130 kg
BSP 200 VS	200	185	172	175	163	153	45	6	28	3,0	0,250 kg

Order data / Spare parts

Type	Part number Flat suction cup seal		
BSP 130 VS	BSPS.10.104 NBR white	BSPS.10.199 NBR grey	-
BSP 200 VS	BSPS.10.328 NBR white	BSPS.10.216 NBR grey	BSPS.10.223 NBR black

Type	Carrying capacity in kg	
	vertical	horizontal
BSP 130 VS	37	57
BSP 200 VS	82	164

The information about the carrying capacity are theoretical calculated values without a safety factor. The calculation of the horizontal carrying capacity is made of the effective diameter, the low-pressure at a vacuum of 60% and the theoretical friction coefficient. * Tested and values calculated with a plane, dry and dust-free glass surface.

Product description

This special suction cup seal Type BSP series VS-NO is often used in automatic stacking systems in the glass industry. The robust and massive seal is in NBR white at approx. 60 Shore and is suitable for smooth glass plates. Plate separating powder like Lucite will not stick to the plane rubber surface; it will stick between the naps and can be easily cleaned with the help of compressed air. The base plate and suspension can be supplied according to customer's specifications. Quick and cost-saving change of the seal.

Product picture

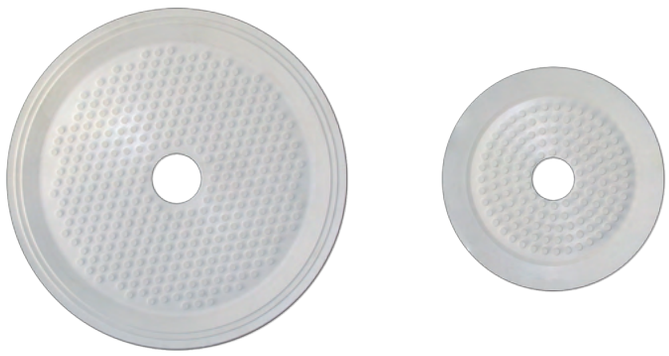

Technical drawing

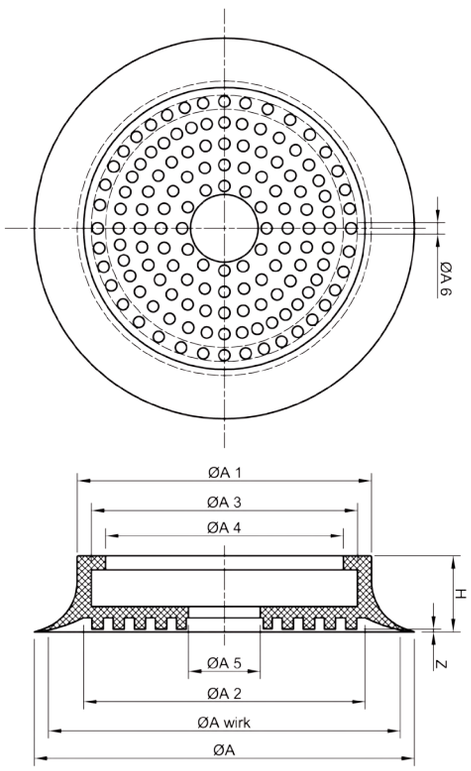

Application picture

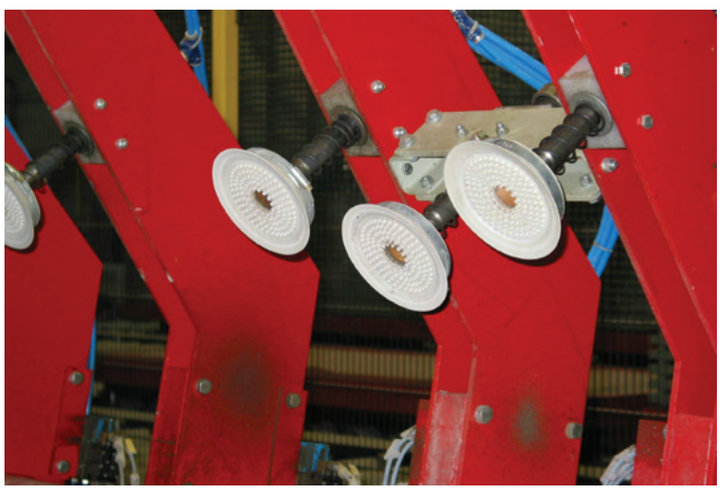

Order data / Spare parts

Technical data

Type	ØA	ØA wirk	ØA1	ØA2	ØA3	ØA4	ØA5	ØA6	H	Z	Weight
BSP 130 VS-NO	130	125	103	99	94	84	26	4	27,0	1,5	0,130 kg
BSP 200 VS-NO	205	186	175	160	165	155	30	4	28,5	4,0	0,280 kg

Type	Part number Flat suction cup seal	Carrying capacity in kg	
		vertical	horizontal
BSP 130 VS-NO	BSPS.10.255 NBR white	54	108
BSP 200 VS-NO	BSPS.10.281 NBR white	136	272

The information about the carrying capacity are theoretical calculated values without a safety factor. The calculation of the horizontal carrying capacity is made of the effective diameter, the low-pressure at a vacuum of 60% and the theoretical friction coefficient. * Tested and values calculated with a plane, dry and dust-free glass surface.

Product picture



Product description

The flat suction cup Type BSP 200 FGS in NBR white at approx. 50 Shore is mostly installed in stacking systems at the cold end of a float glass production line. The steel insert is fixed with an upper steel plate and safety clip. In case of wear only the seal needs to be replaced. It is also possible to place a sinter metal plate into the steel insert to prevent dirt from entering the vacuum system.
The flat suction cups are available with different steel cores.

Application picture

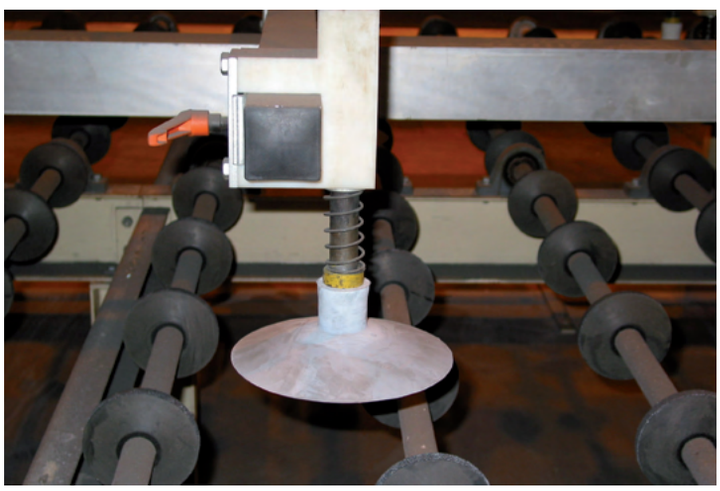

Technical drawing

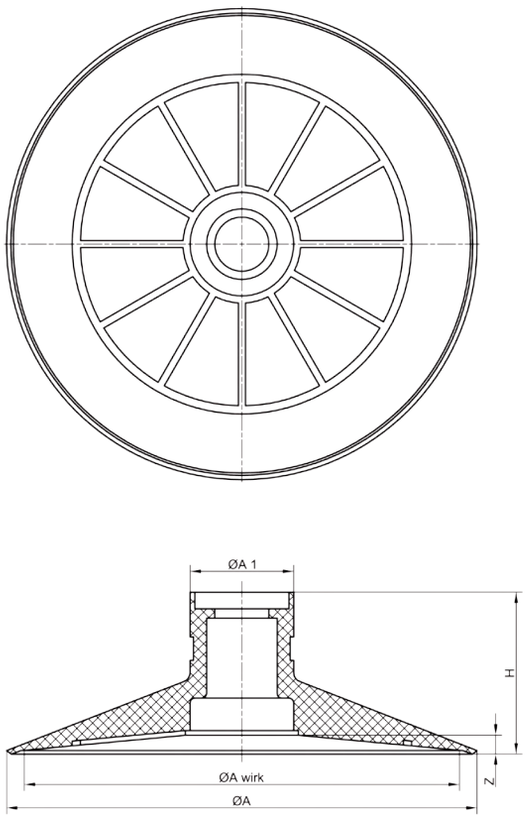

Technical data

Type	ØA	ØA1	H	Z	Weight
BSP 200 FGS 4	200	44	66	4	0,640 kg
BSP 200 FGS 8	200	44	66	8	0,640 kg

Type	Part number Flat suction cup seal	
BSP 200 FGS 4	BSPS.10.139 NBR white	BSPS.10.226 NBR grey
BSP 200 FGS 8	BSPS.10.143 NBR white	BSPS.10.277 NBR grey

Type	Carrying capacity in kg		The information about the carrying capacity are theoretical calculated values without a safety factor. The calculation of the horizontal carrying capacity is made of the effective diameter, the low-pressure at a vacuum of 60% and the theoretical friction coefficient. * Tested and values calculated with a plane, dry and dust-free glass surface.
	vertical	horizontal	
BSP 200 FGS 4	60	144	
BSP 200 FGS 8	60	144	

Order data / Spare parts

Accessories for Type BSP 200 FGS

Product picture



Product picture



Type	Ø outside	H	Part number
(1) Retaining ring for drilling DIN 472 - optional	Ø 32 mm	1,2 mm	BSPS.20.618
(2) Retaining ring for spindle DIN 471 - required	Ø 25 mm	1,2 mm	BSPS.20.156
(3) Sinter filter plate - optional	Ø 32 mm	3,0 mm	BSPS.20.181
(4) Back plate for FGS 200 - required	Ø 40 mm	3,9 mm	BSPS.20.158
(5) Clamping clip for FGS 200 - required	Ø 30 - 45 mm	-	BCC.008

Product picture



The thread of the steel support will be produced according to your requirements. The listed steel cores are standardparts.

Custom-made supports on request!

Technical drawing

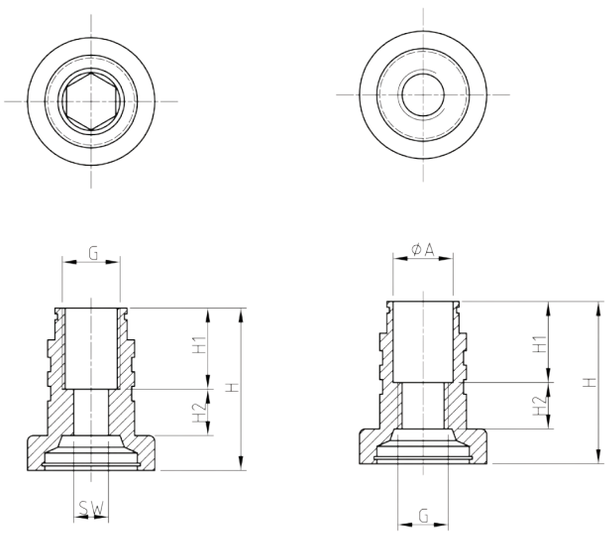

Order data / Spare parts

Technical data

Support	Type	Part number	ØA	SW	G	H	H1	H2	Weight
Version 1	200 FGS	BSPS.20.154.03	-	12	M20	56	32	14	0,222 kg
Version 2	200 FGS	BSPS.20.154.05	20,7	-	1/2“	56	28	12	0,230 kg

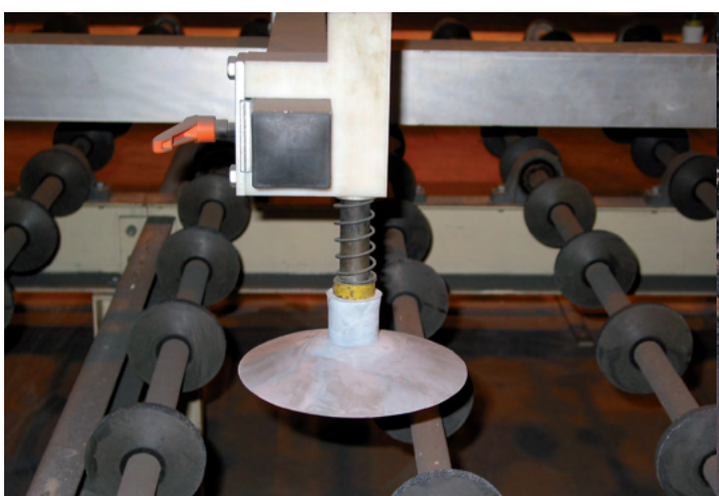



Product description	Page
Series BBSC CO	75
Type BBSC 150 R	76
Type BBSC 150 R different versions	77
Type BBSC 200 R	78
Type BBSC 200 R different versions	79
Type BBSC 250 R	80
Type BBSC 250 R different versions	81
Type BBSC 285 G - L	82
Type BBSC 285 G - L vulcanised	83
Type BBSC Series B	84
Type BBSC 285 FOR, 61 mm	85
Type BBSC 290 BY vulcanised	86
Type BBSC 290 BY	87
Series BBSC R	88
Type BBSC 150 R-OLB	89
Type BBSC 150 P	90
Type BBSC 150 - 2.5	91
Type BBSC 150 BY	92
Type BBSC 200 BY	93
Type BBSC 250 R-MIS	94
Type BBSC 350	95

Product description

The bellow suction cups of series BBSC CO are available in ø 110 mm and ø 150 mm with 1.5 folds. This series of bellow suction cups is extremely robust and durable. The seal is mounted against the aluminium base plate with four screws from the bottom side. The centre bore will be made according to your specifications.

- Ready to install -

Product picture



Technical drawing

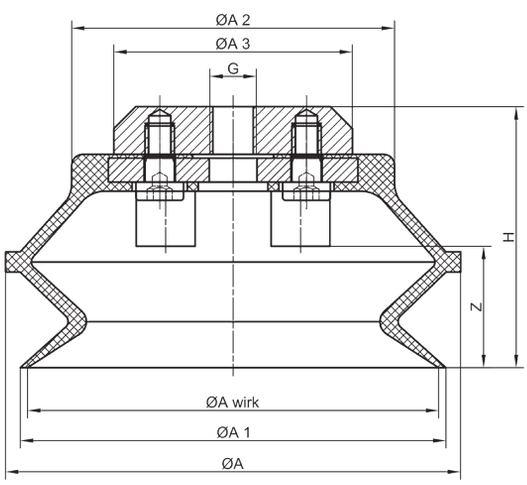

Technical drawing

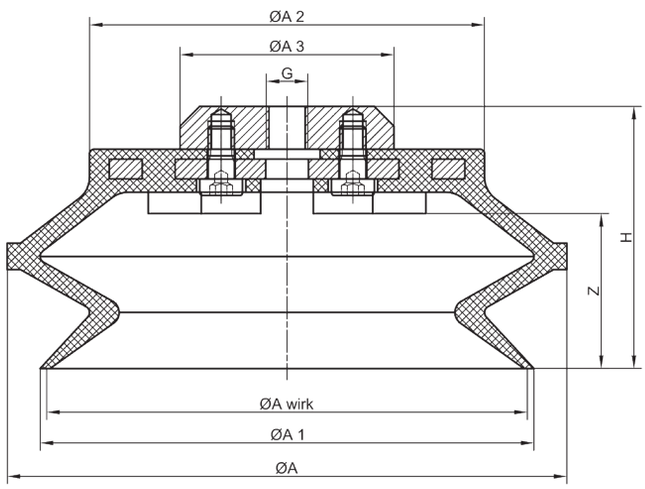

Order data / Spare parts

Technical data

Type	ØA	ØA wirk	ØA1	ØA2	ØA3	G	H	Z	Weight
BBSC 110 CO	124	112	116	88	65	1/4”	71,0	33,0	0,437 kg
BBSC 150 CO	170	146	150	120	75	1/4”	79,5	47,0	0,813 kg

Type	Part number Bellow suction cup	Part number Bellow suction cup seal
BBSC 110 CO	BBSC.110.111.000 NBR black	BSPS.10.238 NBR black
BBSC 150 CO	BBSC.155.111.000 NBR black	BSPS.10.239 NBR black

Type	Carrying capacity in kg		The information about the carrying capacity are theoretical calculated values without a safety factor. The calculation of the horizontal carrying capacity is made of the effective diameter, the low-pressure at a vacuum of 60% and the theoretical friction coefficient. * Tested and values calculated with a plane, dry and dust-free glass surface.
	vertical	horizontal	
BBSC 110 CO	30	60	
BBSC 150 CO	51	102	

Product picture



Product description

The bellow suction cup Type BBSC 150 R is a robust and resistant version and is designed for universal use. The seal has a diameter of 150 mm and is in NBR black. As a result of the elasticity, the bellow suction cup can adapt optimally to the curvature of the work piece and compensate height differences. This bellow suction cup is suitable for destacking-devices in the glass industry due to its robust construction. In case of wear, the seal can be exchanged quick and cost-saving by loosening the clamping clip. The drilling template can be adapted to the customers needs on request.

Application picture

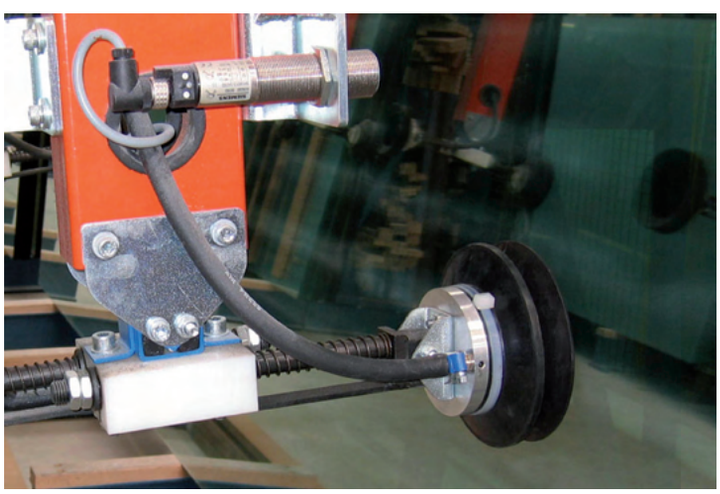

Technical drawing

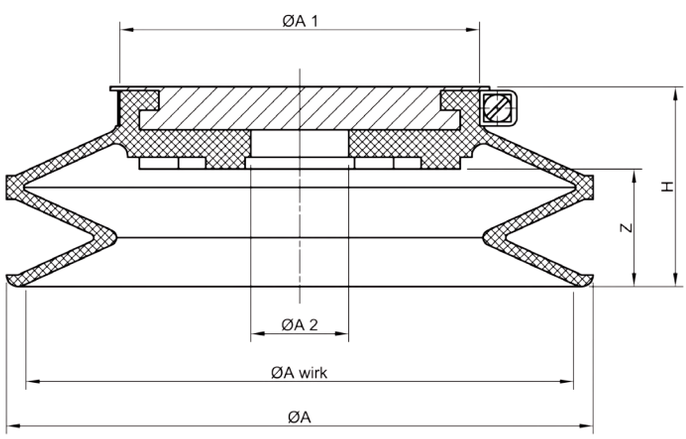

Technical data

Type	ØA	ØA wirk	ØA1	ØA2	H	Z	Weight
BBSC 150 R	150	140	92	25	51	30	0,431 kg

Type	Part number Bellow suction cup	Bellow suction cup seal	Clamping clip
BBSC 150 R	BBSC.150.111.000 NBR black	BSPS.10.222	BSPS.11.006

Type	Carrying capacity in kg	
	vertical	horizontal
BBSC 150 R	47	94

The information about the carrying capacity are theoretical calculated values without a safety factor. The calculation of the horizontal carrying capacity is made of the effective diameter, the low-pressure at a vacuum of 60% and the theoretical friction coefficient. * Tested and values calculated with a plane, dry and dust-free glass surface.

Order data / Spare parts

Type BBSC 150 R different versions

Product picture



Technical data

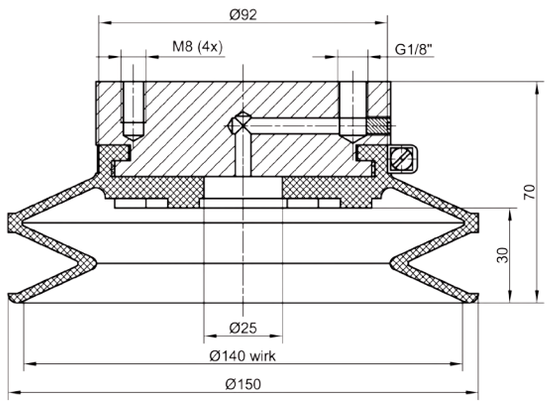

Product description BBSC 150 R-SG	Part number
The bellow suction cup in NBR black is available in different versions. The drilling templates can be adapted to the customers needs. Complete bellow suction cup type BBSC 150 R - SG with aluminum base plate Type BSPS.01.087.14 and clamping clip Type BSPS.11.020.	BSPS.01.087.14 (Base plate) BBSC.150.111.006 (Bellow suction cup)

Product picture



Technical data

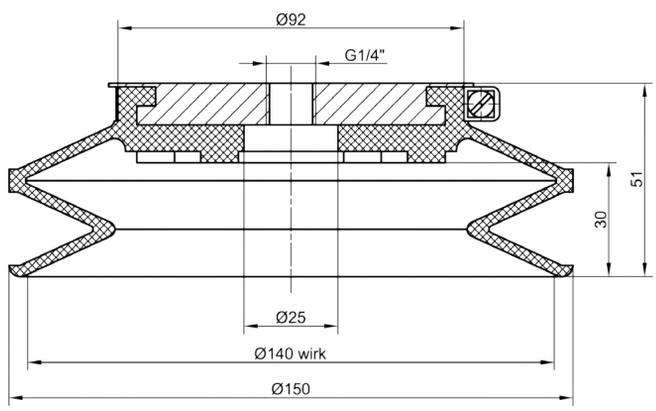

Product description BBSC 150 R, G1/4“	Part number
The bellow suction cup in NBR black is available in different versions. The drilling templates can be adapted to the customers needs. Complete bellow suction cup Type BBSC 150 R, G1/4“ with aluminum base plate Type BSPS.01.087 and clamping clip Type BSPS.11.020	BSPS.01.087 (Base plate) BBSC.150.111.001 (Bellow suction cup)

Product picture

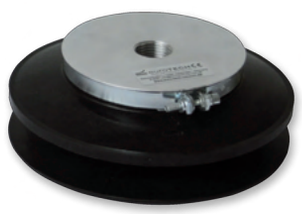

Technical data

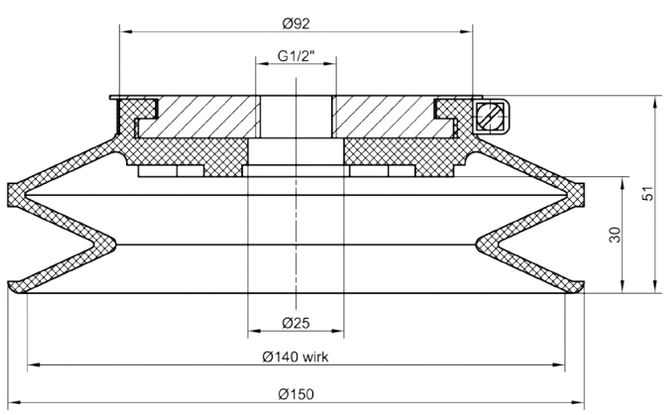

Product description BBSC 150 R, G1/2“	Part number
The bellow suction cup in NBR black is available in different versions. The drilling templates can be adapted to the customers needs. Complete bellow suction cup Type BBSC 150 R, G1/2“ with aluminum base plate Type BSPS.01.087.05 and clamping clip Type BSPS.11.020	BSPS.01.087.05 (Base plate) BBSC.150.111.005 (Bellow suction cup)

Product picture



Product description

The bellow suction cup Type BBSC 200 R is a robust and resistant version and is designed for universal use. The seal has a diameter of 200 mm and is in NBR black. As a result of the elasticity, the bellow suction cup can adapt optimally to the curvature of the work piece and compensate height differences. This bellow suction cup is suitable for destacking-devices in the glass industry due to its robust construction. In case of wear, the seal can be exchanged quick and cost-saving by loosening the clamping clip. The drilling template can be adapted to the customers needs on request.

Application picture



Technical drawing

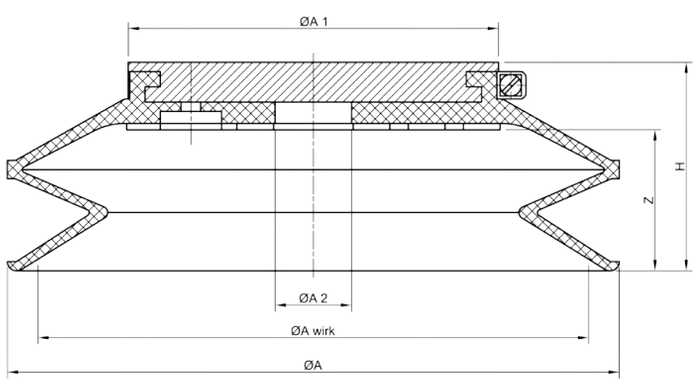

Technical data

Type	ØA	ØA wirk	ØA1	ØA2	H	Z	Weight
BBSC 200 R	200	180	121	25	68	46	0,753 kg

Type	Part number Bellow suction cup	Bellow suction cup seal	Clamping clip
BBSC 200 R	BBSC.200.111.000 NBR black	BSPS.10.211 NBR black	BSPS.11.006

Type	Carrying capacity in kg	
	vertical	horizontal
BBSC 200 R	77	155

The information about the carrying capacity are theoretical calculated values without a safety factor. The calculation of the horizontal carrying capacity is made of the effective diameter, the low-pressure at a vacuum of 60% and the theoretical friction coefficient. * Tested and values calculated with a plane, dry and dust-free glass surface.

Order data / Spare parts

Type BBSC 200 R different versions

Product picture



Technical data

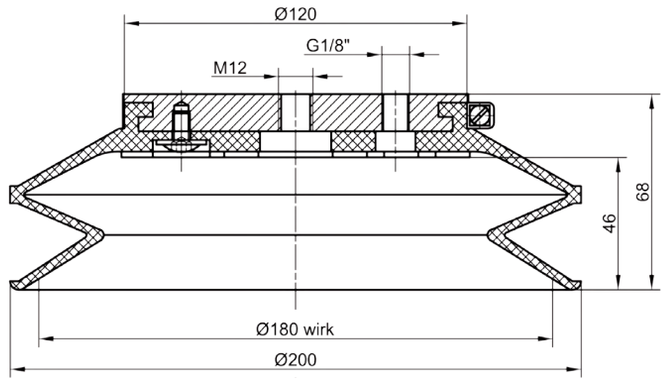

Product description BBSC 200 R-MG	Part number
The bellow suction cup in NBR black is available in different versions. The drilling templates can be adapted to the customers needs. Complete bellow suction cup Type BBSC 200 R-MG with aluminum base plate Type BSPS.01.067.17 and clamping clip Type BSPS.11.006	BSPS.01.067.17 (Base plate) BBSC.200.111.009 (Bellow suction cup)

Product picture



Technical data

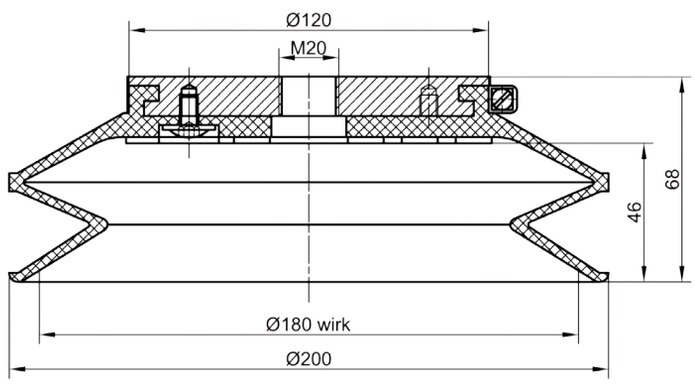

Product description BBSC 200 R-TMB	Part number
The bellow suction cup in NBR black is available in different versions. The drilling templates can be adapted to the customers needs. Complete bellow suction cup Type BBSC 200 R-TMB with aluminum base plate Type BSPS.01.067.12 and clamping clip Type BSPS.11.006.	BSPS.01.067.12 (Base plate) BBSC.200.111.008 (Bellow suction cup)

Product picture



Technical data

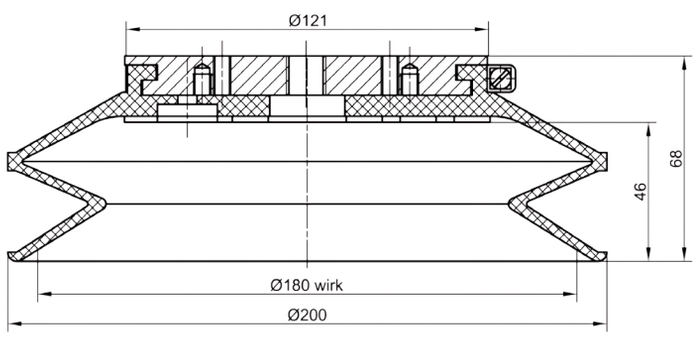

Product description BBSC 200 R-HE	Part number
The bellow suction cup in NBR black is available in different versions. The drilling templates can be adapted to the customers needs. Complete bellow suction cup Type BBSC 200 R-HE with aluminum base plate Type BSPS.01.067.14 and clamping clip Type BSPS.11.006.	BSPS.01.067.14 (Base plate) BBSC.200.111.007 (Bellow suction cup)

Product picture



Product description

The bellow suction cup Type BBSC 250 R is a robust and resistant version and is designed for universal use. The seal has a diameter of 250 mm and is in NBR black at approx. 60 Shore. As a result of the elasticity, the bellow suction cup can adapt optimally to the curvature of the work piece and compensate height differences. This bellow suction cup is suitable for destacking-devices in the glass industry due to its robust construction. In case of wear, the seal can be exchanged quick and cost-saving by loosening the clamping clip. The drilling template can be adapted to the customers needs on request.

Application picture



Technical drawing

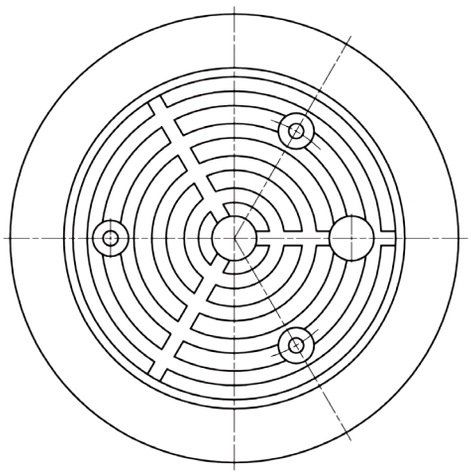

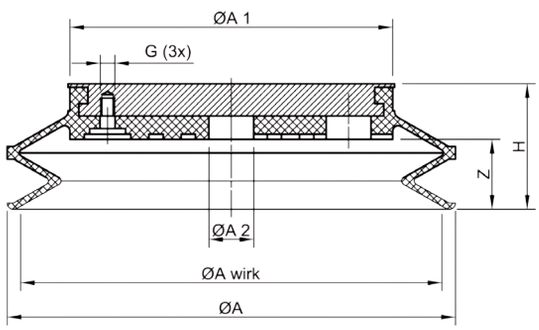

Technical data

Type	ØA	ØA wirk	ØA1	ØA2	G	H	Z	Weight
BBSC 250 R	250	235	180	25	3xM8	70	39	1,390 kg

Type	Part number Bellow suction cup	Bellow suction cup seal	Clamping clip
BBSC 250 R	BBSC.250.111.000 NBR black	BSPS.10.221 NBR black	BSPS.11.005

Type	Carrying capacity in kg	
	vertical	horizontal
BBSC 250 R	132	265

Order data / Spare parts

The information about the carrying capacity are theoretical calculated values without a safety factor. The calculation of the horizontal carrying capacity is made of the effective diameter, the low-pressure at a vacuum of 60% and the theoretical friction coefficient. * Tested and values calculated with a plane, dry and dust-free glass surface.

Type BBSC 250 R different versions

Product picture



Technical data

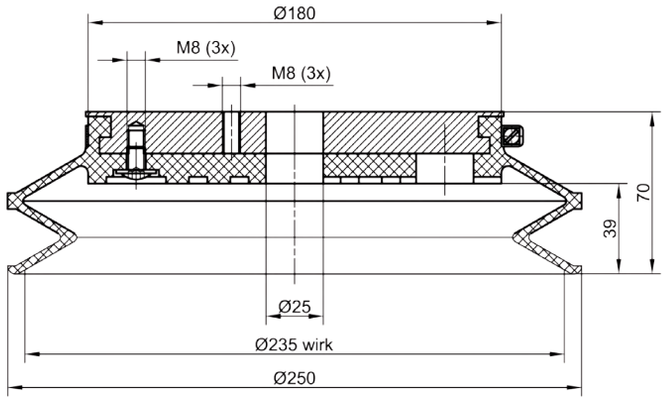

Product description BBSC 250 R-HA	Part number
The bellow suction cup in NBR black is available in different versions. The drilling templates can be adapted to the customers needs. Complete bellow suction cup Type BBSC 250 R-HA with aluminum base plate Type BSPS.01.056.14 and clamping clip Type BSPS.11.005.	BSPS.01.056.14 (Base plate) BBSC.250.111.003 (Bellow suction cup)

Product picture



Technical data

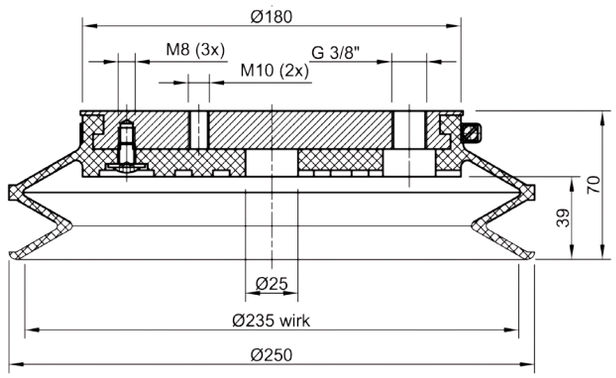

Product description BBSC 250 R-HE	Part number
The bellow suction cup in NBR black is available in different versions. The drilling templates can be adapted to the customers needs. Complete bellow suction cup Type BBSC 250 R-HE with aluminum base plate Type BSPS.01.056.21 and clamping clip Type BSPS.11.005.	BSPS.01.056.21 (Base plate) BBSC.250.111.006 (Bellow suction cup)

Product picture



Technical data

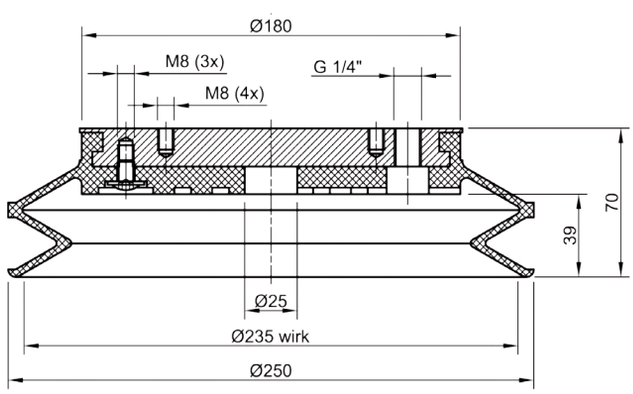

Product description BBSC 250 R-TMB	Part number
The bellow suction cup in NBR black is available in different versions. The drilling templates can be adapted to the customers needs. Complete bellow suction cup Type BBSC 250 R-TMB with aluminum base plate Type BSPS.01.056.33 and clamping clip Type BSPS.11.005.	BSPS.01.056.33 (Base plate) BBSC.250.111.011 (Bellow suction cup)

Product picture



Product description

The bellow suction cup Type BBSC 285 G-L is very flexible and developed for universal use, especially in automatic glass handling systems. The seal is in NBR black at approx. 50
Shore and has a diameter of 280 mm. Suitable for curved and smooth surfaces. Good height compensation due to the
1,5 bellows. Quick and cost-saving change of the seal by means of the clamping clip. The aluminum base is made up already for installation onto the support of the stacking system.

- Ready to install -

Application picture



Technical drawing

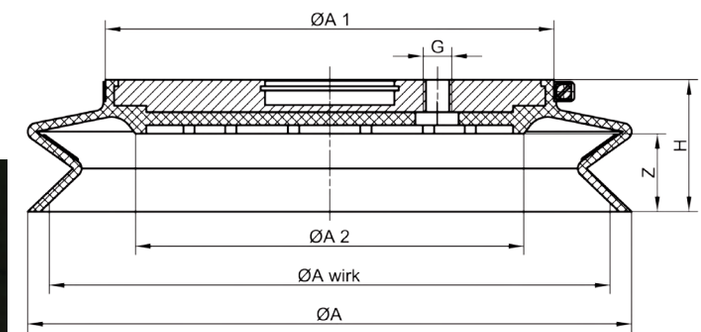

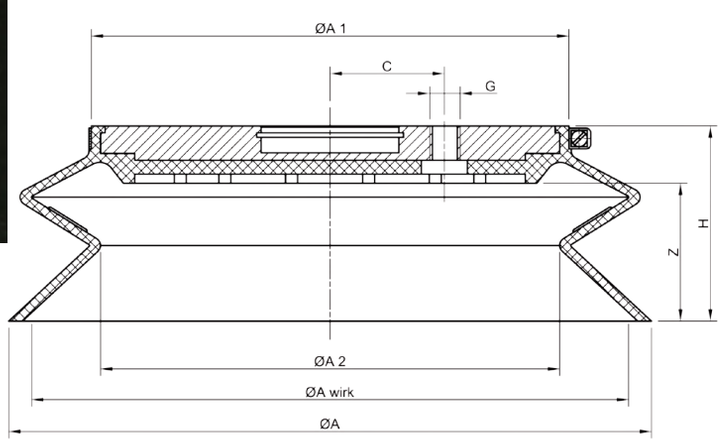

Technical data

Type	ØA	ØA wirk	ØA1	ØA2	G	C	H	Z	Weight
285 G/61-L	280	260	208	180	1/4“	50	61	36	1,900kg
285 G/85-L	280	260	208	200	1/4“	50	85	60	1,975 kg

Type	Part number Bellow suction cup	Bellow suction cup seal	Clamping clip
285 G/61-L	BBSC.285.111.001 NBR black	BSPS.10.297 NBR black	BSPS.11.013
285 G/85-L	BBSC.286.111.001 NBR black	BSPS.10.298 NBR black	BSPS.11.013

Type	Carrying capacity in kg	
	vertical	horizontal
285 G/61-L	162	324
285 G/85-L	162	324

The information about the carrying capacity are theoretical calculated values without a safety factor. The calculation of the horizontal carrying capacity is made of the effective diameter, the low-pressure at a vacuum of 60% and the theoretical friction coefficient. * Tested and values calculated with a plane, dry and dust-free glass surface.

Order data / Spare parts

Type BBSC 285 G - L vulcanised

Product description

The bellow suction cup has a diameter of 285 G-L mm and is made of NBR black. It has 1.5 folds and a Shore hardness of approx. 60. The seal is vulcanised onto an aluminum base plate and has an 60 mm milled out center section for the support and an 1/4“ vacuum connection. There are two heights available with 61 mm or 85 mm. This bellow suction cup is suitable for an Lisec-stacking system.

- Ready to install -

Product picture



Technical drawing

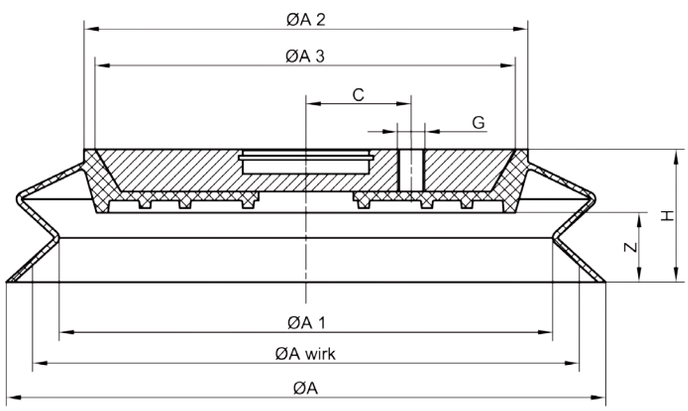

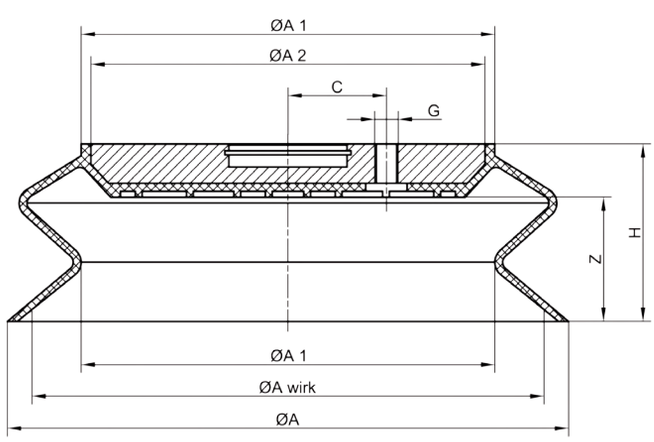

Application picture

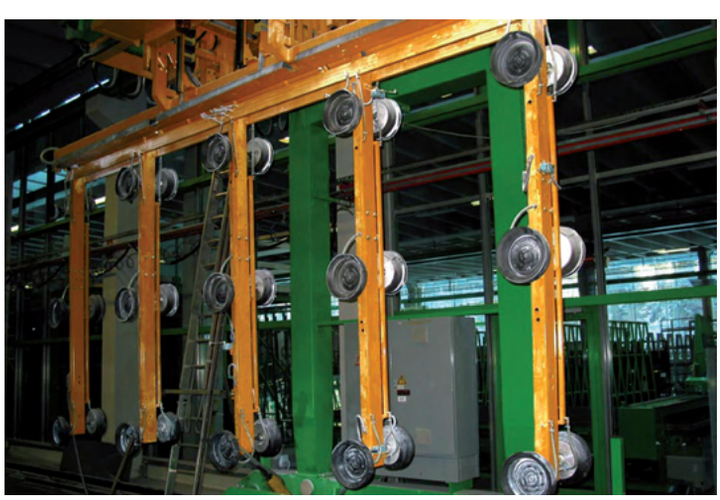

Order data / Spare parts

Technical data

Type	ØA	ØA wirk	ØA1	ØA2	ØA3	C	G	H	Z	Weight
285 G/61-L	285	260	234,5	211	200	50	1/4“	63	33	1,900kg
285 G/85-L	285	260	210	210	200	50	1/4“	90	63	1,975 kg

Type	Part number Bellow suction cup	Part number Bellow suction cup seal
285 G/61-L	BBSC.285.111.006 NBR black	vulcanised
285 G/85-L	BBSC.286.111.003 NBR black	vulcanised

Type	Carrying capacity in kg		
	vertical	horizontal	
285 G/61-L	162	324	The information about the carrying capacity are theoretical calculated values without a safety factor. The calculation of the horizontal carrying capacity is made of the effective diameter, the low-pressure at a vacuum of 60% and the theoretical friction coefficient. * Tested and values calculated with a plane, dry and dust-free glass surface.
285 G/85-L	162	324	

Product picture



Product description

The bellow suction cup Type BBSC series B is very flexible and developed for universal use. The seal is in NBR black at approx. 60 Shore and has a diameter of 150/ 210/ 250 mm. Suitable for curved and smooth surfaces. Good height compensation due to the 1.5 bellows. As a result of the flexible construction, it is suitable for stacking glass sheets in handling systems. The seal is attached onto the aluminum base plate and its residual stress will keep it in place.

- Drilling and tapping of holes can be done to your request -

Application picture



Technical drawing

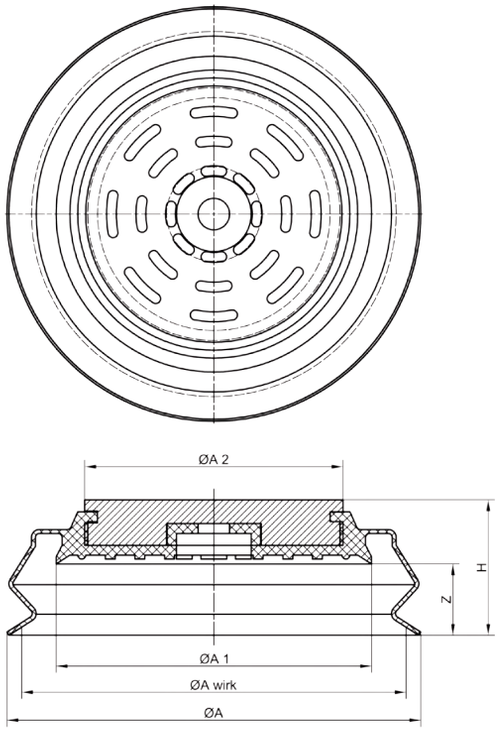

Technical data

Type	ØA	ØA wirk	ØA1	ØA2	H	Z	Weight
BBSC 150 B	150	130	101	42	59	29	0,373 kg
BBSC 210 B	210	195	160	131	69	39	1,194 kg
BBSC 250 B	250	230	202	131	69	36	1,471 kg

Order data / Spare parts

Type	Part number Bellow suction cup	Part number Bellow suction cup seal
BBSC 150 B	BBSC.149.111.000 NBR black	BSPS.10.407 NBR black
BBSC 210 B	BBSC.210.111.000 NBR black	BSPS.10.220 NBR black
BBSC 250 B	BBSC.255.111.000 NBR black	BSPS.10.442 NBR black

Type	Carrying capacity in kg		
	vertical	horizontal	
BBSC 150 B	40	81	The information about the carrying capacity are theoretical calculated values without a safety factor. The calculation of the horizontal carrying capacity is made of the effective diameter, the low-pressure at a vacuum of 60% and the theoretical friction coefficient. * Tested and values calculated with a plane, dry and dust-free glass surface.
BBSC 210 B	91	182	
BBSC 250 B	127	254	

Product description

The bellow suction cup Type BBSC 285 FOR is very flexible and developed for universal use, especially in automatic glass handling systems. The seal is in NBR black at approx.
45° Shore and has a diameter of 285 mm. Suitable for curved and smooth surfaces. Good height compensation due to the
1,5 bellows. Quick and cost-saving change of the seal by means of the clamping clip. The aluminum base plate can be drilled and tapped to your request. Picture shows ForEl version.

- Other drilling templates is possible -

Product picture



Technical drawing

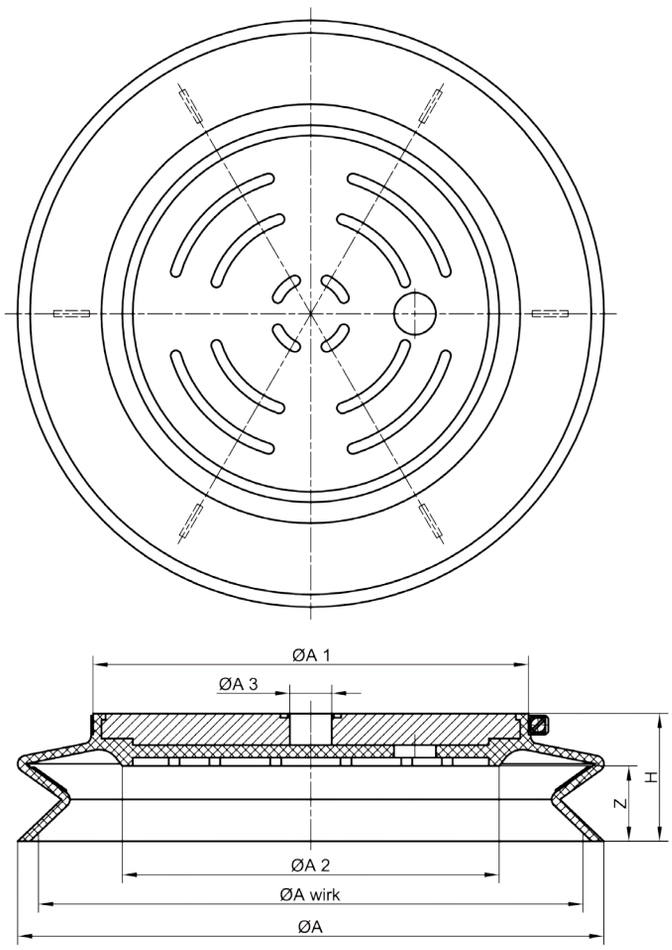

Application picture



Order data / Spare parts

Type	ØA	ØA wirk	ØA1	ØA2	ØA3	H	Z	Weight
285 G/61-FOR	280	260	208	180	20H7	61	36	1,900kg

Type	Part number Bellow suction cup	Bellow suction cup seal	Clamping clip
285 G/61-FOR	BBSC.285.111.002 NBR black	BSPS.10.297.01 NBR black	BSPS.11.013

Type	Carrying capacity in kg	
	vertical	horizontal
285 G/61-FOR	162	324

The information about the carrying capacity are theoretical calculated values without a safety factor. The calculation of the horizontal carrying capacity is made of the effective diameter, the low-pressure at a vacuum of 60% and the theoretical friction coefficient. * Tested and values calculated with a plane, dry and dust-free glass surface.

Technical data

Product picture



Product description

The bellow suction cup Type BBSC 290 BY is predominantly used in glass stocking portals. The seal is vulcanised onto an aluminum base plate and has a diameter of 270 mm and is in NBR black. The flexible and robust version is designed for universal use. As a result of the elasticity and the 1.5 folds, the bellow suction cup can compensate even big height differences.

Application picture



Technical drawing

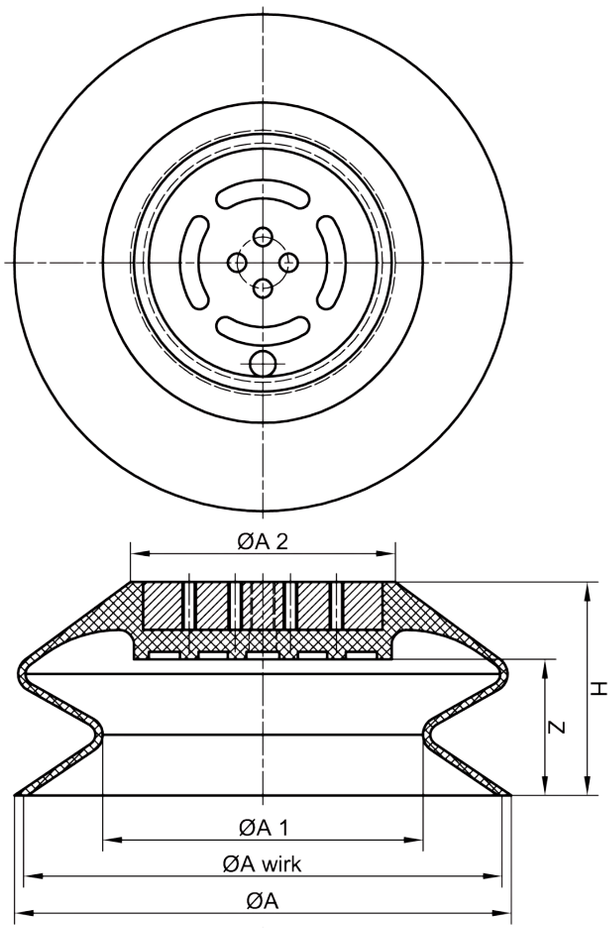

Technical data

Type	ØA	ØA wirk	ØA1	ØA2
BBSC 290 BY vulc.	270	260	174	144

Type	Part number Bellow suction cup
BBSC 290 BY vulc.	BBSC.290.111.003 NBR black

Type	Carrying capacity in kg	
	vertical	horizontal
BBSC 290 BY vulc.	162	324

Order data / Spare parts

G	G1	H	Z
1/4“	4xM8	116	74

Part number Bellow suction cup seal	Weight
vulcanised	2,115 kg

The information about the carrying capacity are theoretical calculated values without a safety factor. The calculation of the horizontal carrying capacity is made of the effective diameter, the low-pressure at a vacuum of 60% and the theoretical friction coefficient. * Tested and values calculated with a plane, dry and dust-free glass surface.

Product description

The bellow suction cup Type BBSC 290 BY is very flexible and is developed for universal use, especially in automatic glass handling systems. The seal in NBR black at approx. 45 Shore is available with a diameter of 270 mm and suitable for curved and smooth surfaces. Good height compensation due to the 1.5 bellows. The aluminum base plate is available with threaded holes to fit the automatic stacking machine. Quick and cost-saving change of the seal by means of the clamping clip.

Product picture



Technical drawing

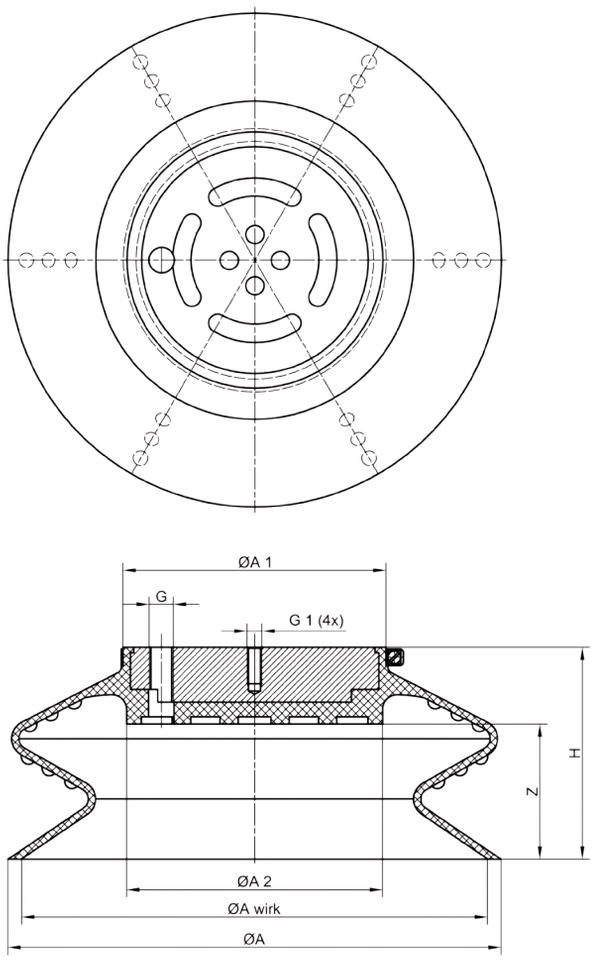

Application picture



Order data / Spare parts

Type	ØA	ØA wirk	ØA1	ØA2	G	G1	H	Z	Weight
BBSC 290 BY	270	255	144	140	1/4“	4xM8	116	74	2,000 kg

Type	Part number Bellow suction cup	Bellow suction cup seal	Clamping clip
BBSC 290 BY	BBSC.290.111.001 NBR black	BSPS.10.364 NBR black	BSPS.11.017

Type	Carrying capacity in kg	
	vertical	horizontal
BBSC 290 BY	156	312

Technical data

The information about the carrying capacity are theoretical calculated values without a safety factor. The calculation of the horizontal carrying capacity is made of the effective diameter, the low-pressure at a vacuum of 60% and the theoretical friction coefficient. * Tested and values calculated with a plane, dry and dust-free glass surface.

Product picture



Product description

The bellow suction cup seal Type BBSC - R is available in two size. The seal is made in NBR black with 1.5 folds and secured with an clamping clip onto the aluminum base plate. Good height compensation due to the 1,5 bellows. The aluminum base plate has a G 1/4“or G 3/8“ inside thread (please select).
This bellow suction cup is predominantly used in glass stacking systems.

Technical drawing

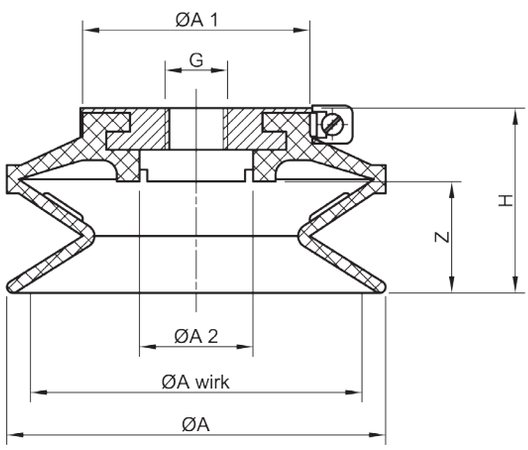

Technical drawing

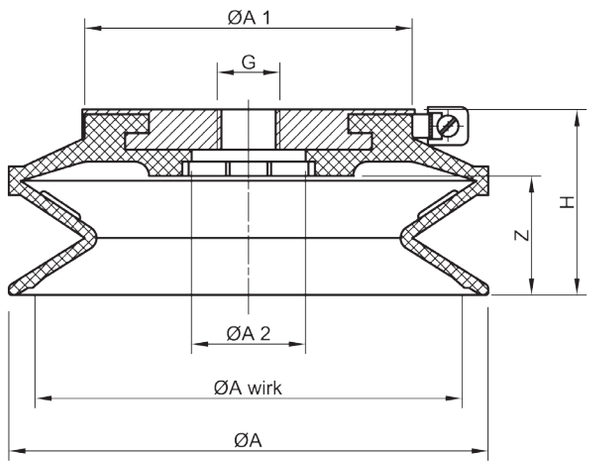

Technical data

Type	ØA	ØA wirk	ØA1	ØA2	G	H	Z	Weight
BBSC 80 R	80	70	48	24	1/4“ 3/8“	39	23,5	0,088 kg
BBSC 100 R	100	90	69	24	1/4“ 3/8“	39	25,0	0,136 kg

Type	Part number Bellow suction cup	Part number Bellow suction cup seal	Clamping clip
BBSC 80 R	BBSC.080.111.001 mit G 1/4“ BBSC.080.111.002 mit G 3/8“	BSPS.10.313	BSPS.11.063
BBSC 100 R	BBSC.100.111.001 mit G 1/4“ BBSC.100.111.003 mit G 3/8“	BSPS.10.316	BSPS.11.062

Type	Carrying capacity in kg	
	vertical	horizontal
BBSC 80 R	11,00 kg	23,00 kg
BBSC 100 R	19,00 kg	38,00 kg

The information about the carrying capacity are theoretical calculated values without a safety factor. The calculation of the horizontal carrying capacity is made of the effective diameter, the low-pressure at a vacuum of 60% and the theoretical friction coefficient. * Tested and values calculated with a plane, dry and dust-free glass surface.

Order data / Spare parts

Product description

The bellow suction cup seal is made of NBR black, has a diameter of 165 mm and 1.5 folds. The aluminum base plate has 2 x M8 inside threads as well as a central M16 inside thread and a G1/8“ as vacuum connection out of center.
The seal is vulcanised onto the aluminum base plate. The surface of the base plate is anodized.

- Suitable to fit Olbricht handling system -

Product picture





Technical drawing

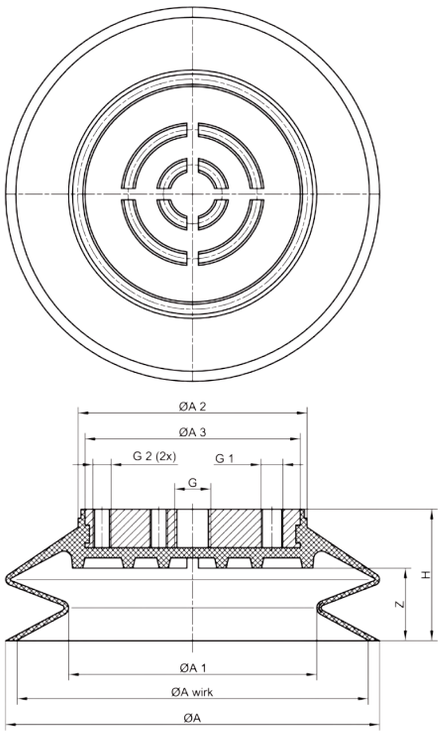

Application picture



Order data / Spare parts

Technical data

Type	ØA	ØA wirk	ØA1	ØA2	G	G1	G2	H	Z	Weight
BBSC 150 R-OLB	165	155	109	101	M16	1/8“	2xM8	58	32	0,518 kg

Type	Part number Bellow suction cup	Bellow suction cup seal
BBSC 150 R-OLB	BBSC.150.111.050 NBR black	vulcanised

Type	Carrying capacity in kg	
	vertical	horizontal
BBSC 150 R-OLB	57	115

The information about the carrying capacity are theoretical calculated values without a safety factor. The calculation of the horizontal carrying capacity is made of the effective diameter, the low-pressure at a vacuum of 60% and the theoretical friction coefficient. * Tested and values calculated with a plane, dry and dust-free glass surface.

Product picture



Product description

The bellow suction cup has a diameter of Ø 150 mm and the seal is made of NBR black. The aluminum base plate has an centric hole with a G1/2” inside thread. Good height compensation due to the 1.5 bellows. Suitable for curved and smooth surfaces. As a result of the flexible construction, it is suitable for stacking glass sheets in handling systems. In case of wear, the seal can be exchanged quick and cost saving by loosening the clamping clip. The bellow suction cup is mostly installed in a glass stacker from Lisec for separating of glass sheets.

Technical drawing

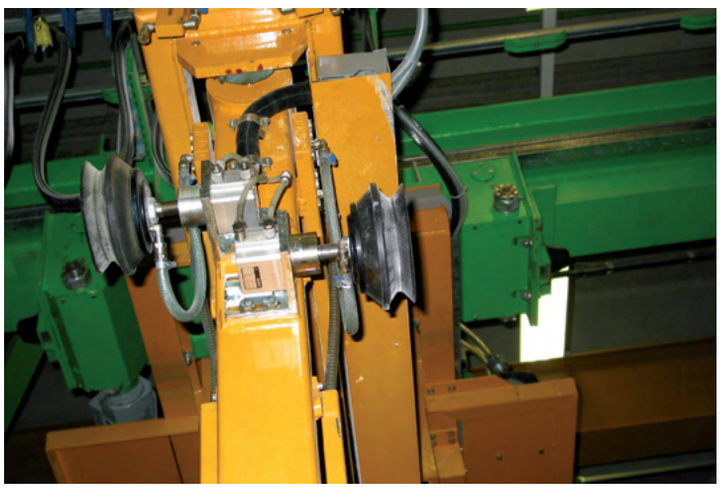

Technical drawing

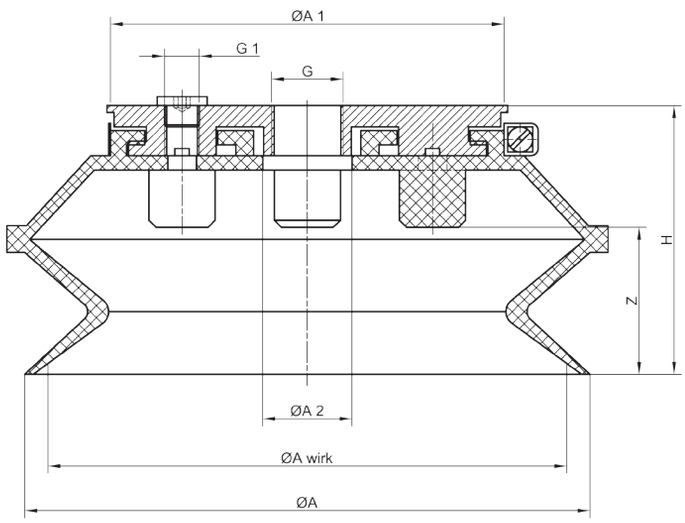

Technical data

Type	ØA	ØA wirk
BBSC 150 P	158	145

Type	Part number Bellow suction cup
BBSC 150 P	BBSC.158.111.001 NBR black

Type	Carrying capacity in kg	
	vertical	horizontal
BBSC 150 P	50	101

Order data / Spare parts

ØA1	G	H	Z	Weight
110	1/2“	71	41	0,468 kg

Part number Bellow suction cup seal	Clamping clip
BSPS.10.062	BSPS.11.020

The information about the carrying capacity are theoretical calculated values without a safety factor. The calculation of the horizontal carrying capacity is made of the effective diameter, the low-pressure at a vacuum of 60% and the theoretical friction coefficient. * Tested and values calculated with a plane, dry and dust-free glass surface.

Product description

The bellow suction cup has a diameter of Ø 150 mm and the seal is made in NBR black. The aluminum base plate has an centric hole with a G1/4” inside thread. Good height compensation due to the 2.5 bellows. Suitable for curved and smooth surfaces. As a result of the flexible construction, it is suitable for stacking glass sheets in handling systems. In case of wear, the seal can be exchanged quick and cost saving by loosening the clamping clip. The bellow suction cup is mostly installed in a glass stacker from Armatec.

Product picture



Technical drawing

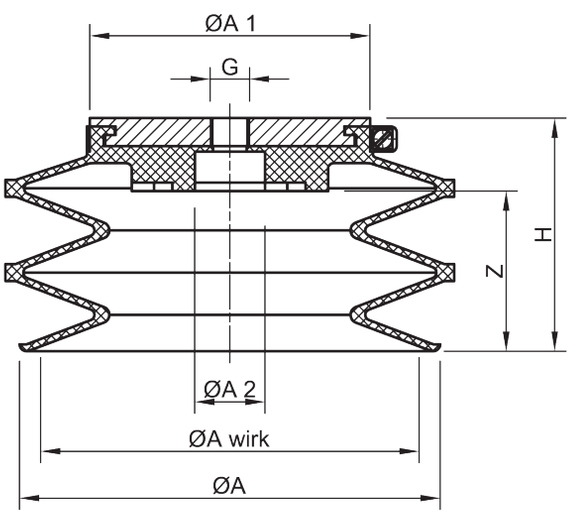

Technical drawing

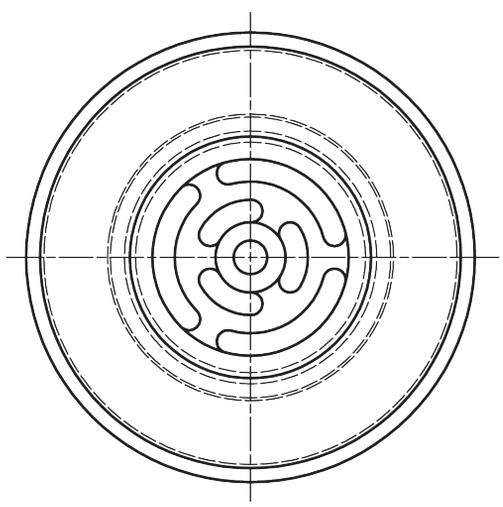

Order data / Spare parts

Type	ØA	ØA wirk	ØA1	ØA2	G	H	Z	Weight
BBSC 150 - 2.5	150	135	100	25	1/4“	83	57	0,580 kg

Type	Part number Bellow suction cup	Part number Bellow suction cup seal	Clamping clip
BBSC 150 - 2.5	BBSC.153.111.001 NBR black	BSPS.10.152	BSPS.11.021

Type	Carrying capacity in kg	
	vertical	horizontal
BBSC 150 - 2.5	43	87

Technical data

The information about the carrying capacity are theoretical calculated values without a safety factor. The calculation of the horizontal carrying capacity is made of the effective diameter, the low-pressure at a vacuum of 60% and the theoretical friction coefficient. * Tested and values calculated with a plane, dry and dust-free glass surface.

Product picture



Product description

The bellow suction cup type BBSC 150 BY is predominantly used in glass stocking portals. The seal has a diameter of 150 mm and is made of NBR black. The flexible and robust version is designed for the universal use. As a result of the elasticity and the 1.5 folds, the bellow suction cup can compensate height differences perfectly.
In case of wear, the seal can be exchanged quick and cost-saving by loosening the clamping clip.

Application picture

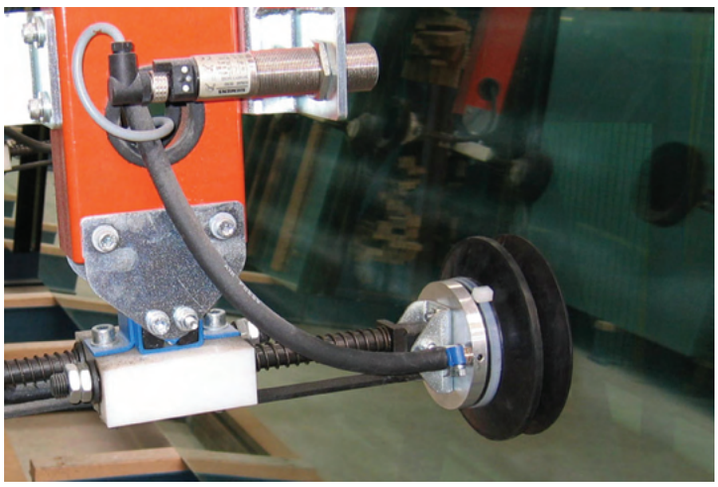

Technical drawing

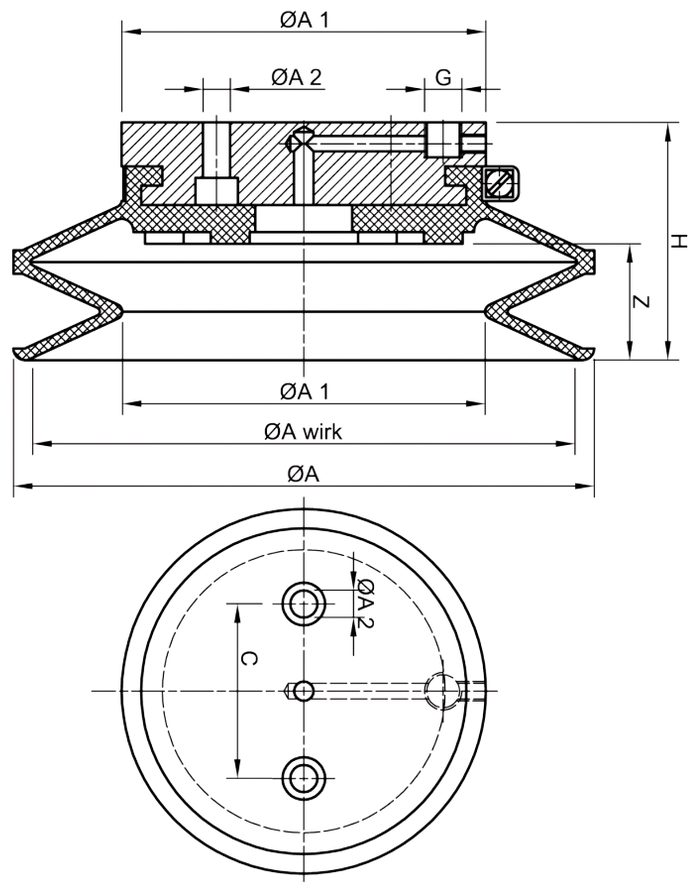

Technical data

Type	ØA	ØA wirk	ØA1	ØA2	G	G1	C	C1	R	H	Z	Weight
BBSC 150 BY	150	140	94	96	1/8“	-	45	-	-	62	29	0,580 kg

Type	Part number Bellow suction cup	Part number Bellow suction cup seal	Clamping clip
BBSC 150 BY	BBSC.150.111.007 NBR black	BSPS.10.222 NBR black	BSPS.11.020

Type	Carrying capacity in kg	
	vertical	horizontal
BBSC 150 BY	47	94

Order data / Spare parts

The information about the carrying capacity are theoretical calculated values without a safety factor. The calculation of the horizontal carrying capacity is made of the effective diameter, the low-pressure at a vacuum of 60% and the theoretical friction coefficient. * Tested and values calculated with a plane, dry and dust-free glass surface.

Product description

The bellow suction cup type BBSC 200 BY is predominantly used in glass stocking portals. The seal has a diameter of 200 mm and is made of NBR black. The flexible and robust version is designed for the universal use. As a result of the elasticity and the 1.5 folds, the bellow suction cup can compensate height differences perfectly.
In case of wear, the seal can be exchanged quick and cost-saving by loosening the clamping clip.

Product picture



Technical drawing

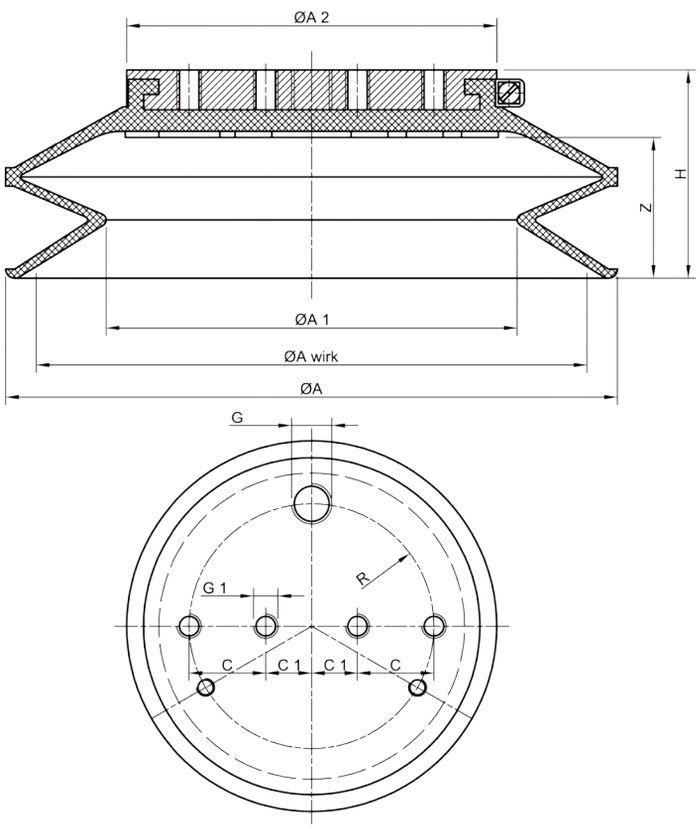

Application picture

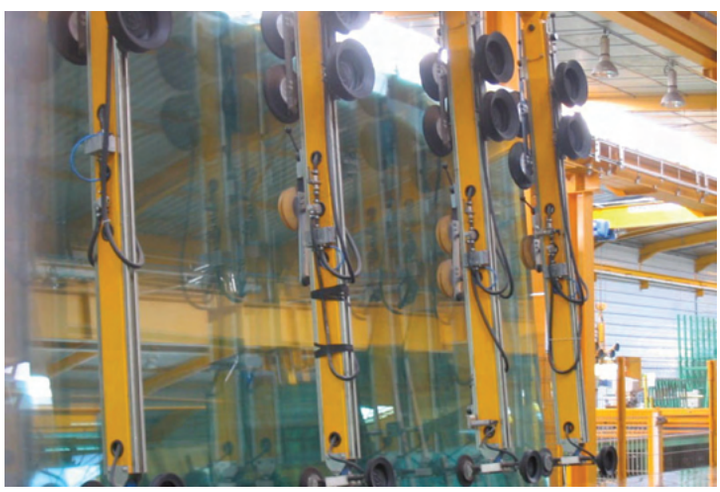

Order data / Spare parts

Type	ØA	ØA wirk	ØA1	ØA2	G	G1	C	C1	R	H	Z	Weight
BBSC 200 BY	200	180	134	121	1/4“	M8	25	15	40	68	46	0,600 kg

Type	Part number Bellow suction cup	Part number Bellow suction cup seal	Clamping clip
BBSC 200 BY	BBSC.200.111.002 NBR black	BSPS.10.211.01 NBR black	BSPS.11.006

Type	Carrying capacity in kg	
	vertical	horizontal
BBSC 200 BY	77	155

Technical data

The information about the carrying capacity are theoretical calculated values without a safety factor. The calculation of the horizontal carrying capacity is made of the effective diameter, the low-pressure at a vacuum of 60% and the theoretical friction coefficient. * Tested and values calculated with a plane, dry and dust-free glass surface.

Product picture



Product description

The bellow suction cup Type BBSC 250 R-MIS has a diameter of 250 mm, is in NBR black at approx. 60 Shore and has 1,5 folds. The aluminum base plate has a centric hole with a 3/8“ inside thread as well as 1 treaded hole with 3/8“, 53 mm excentric. Quick and cost-saving change of the seal by means of the clamping clip.

Application picture



Technical drawing

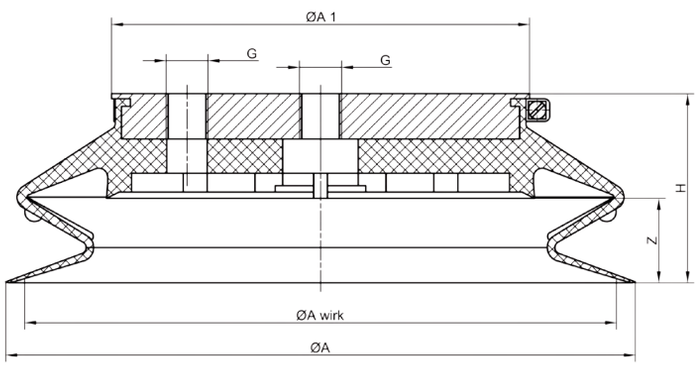

Technical data

Type	ØA	ØA wirk	ØA1	G
250 R-MIS	250	235	166	3/8“

Type	Part number Flat suction cup
250 R-MIS	Part number Bellow suction cup

Type	Carrying capacity in kg	
	vertical	horizontal
250 R-MIS	132	265

Order data / Spare parts

G1	H	Z	Weight
3/8“	75	33,5	1,856 kg

Part number Bellow suction cup seal	Clamping clip
BSPS.10.464 NBR black	BSPS.11.023

The information about the carrying capacity are theoretical calculated values without a safety factor. The calculation of the horizontal carrying capacity is made of the effective diameter, the low-pressure at a vacuum of 60% and the theoretical friction coefficient. * Tested and values calculated with a plane, dry and dust-free glass surface.



Product description

The bellow suction cup Type BBSC 350 is predominantly used in the glass industry. The seal has a diameter of 350 mm and is made of NBR black. The flexible and robust version is designed for universal use. As a result of the elasticity and the 1.5 folds, the bellow suction cup can compensate even big height differences perfectly.
In case of wear, the seal can be exchanged by loosening the six M8 screws.

- Several drilling templates available -

Product picture



Technical drawing

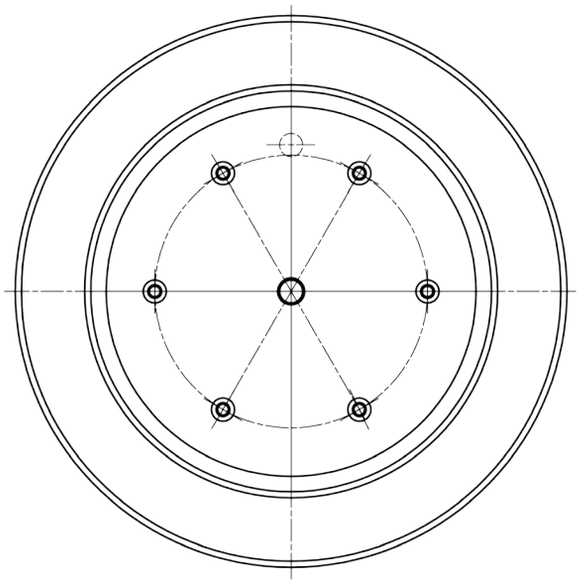

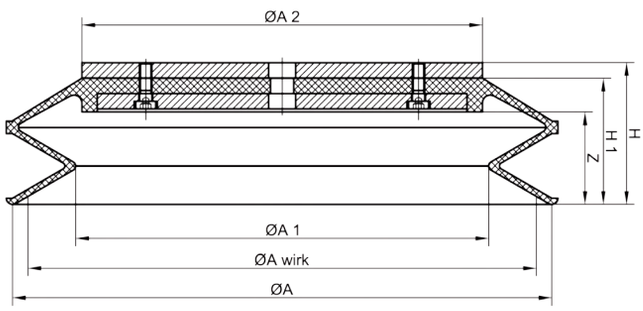

Application picture

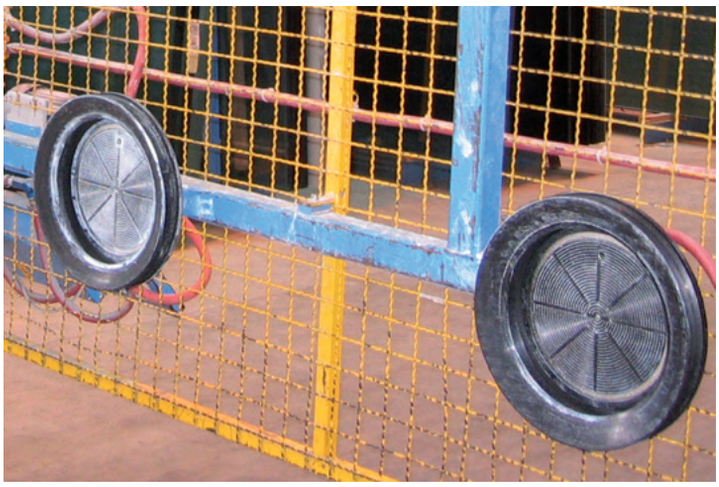

Order data / Spare parts

Technical data

Type	ØA	ØA wirk	ØA1	ØA2	H	H1	Z	Weight
BBSC 350	350	330	268	260	90	82	60	4,300 kg

Type	Part number Bellow suction cup
BBSC 350	BBSC.350.111.000 NBR black

Type	Carrying capacity in kg	
	vertical	horizontal
BBSC 350	261	523

The information about the carrying capacity are theoretical calculated values without a safety factor. The calculation of the horizontal carrying capacity is made of the effective diameter, the low-pressure at a vacuum of 60% and the theoretical friction coefficient. * Tested and values calculated with a plane, dry and dust-free glass surface.

Product description	Page
Ball joint series BAA	97
Vacuum gauges Series BVG	98
Transport rollers Series NKR	99
Type Series MTC	100
Type Series SSÜZ	101
Type Series BVF 530	102
Type Series BFF	103
Type Series BCS	104
Type Series FPH	105
Type Series BCCP (Aluminum)	106
Type Series BCCP (Steel)	107
Type Series BWS	108
Type Series BHSV	109
Ejector Type VEES	110
Ejector Type Series AV	111

Product description

The ball joints of series BAA are suitable as articulated connecting piece between suction cups and suspension. The ball joints are made of steel. The rubber sleeve protects from soiling. The ball joints are vacuum-sealed and tilt able around 24° to all directions.

Product picture



Technical drawing

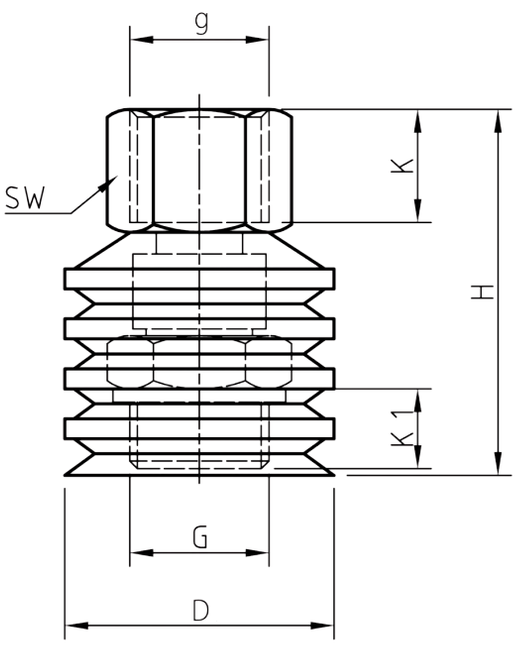

Application picture



Order data / Spare parts

Technical data

Type	ØA	H	K	K1	G	SW	Weight	Part number
BAA 1	20,0	33	8,5	6,5	1/8“	12	0,021	BAA.001
BAA 2	40,5	55	17,0	12,0	1/2“	24	0,116	BAA.002
BAA 3	50,5	64	17,0	15,0	3/4“	30	0,238	BAA-.003

Product picture



Product description

The vacuum gauges have a diameter of 40 mm, 62 mm or 99 mm and a red and green indication field. The installed instrument movement has a silicone shock absorption for a calm needle movement. The vacuum gauges have an outside thread at the bottom or the back of the vacuum gauge.

Suitable for high vacuum up to 99%.

Application picture

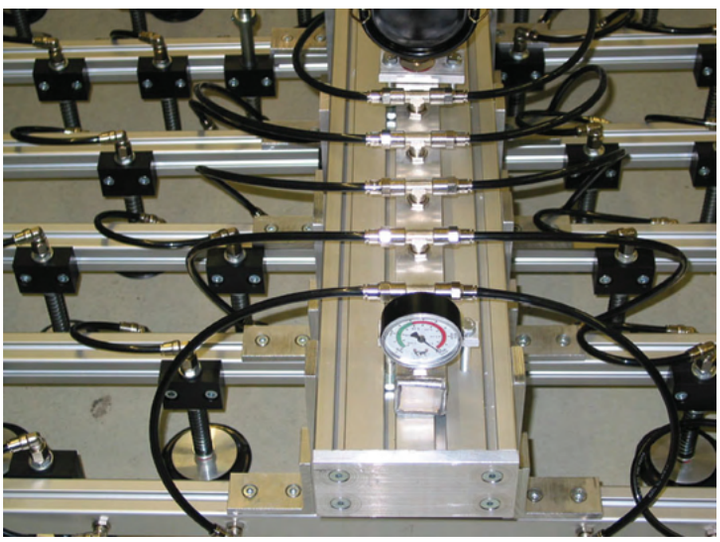

Technical drawing

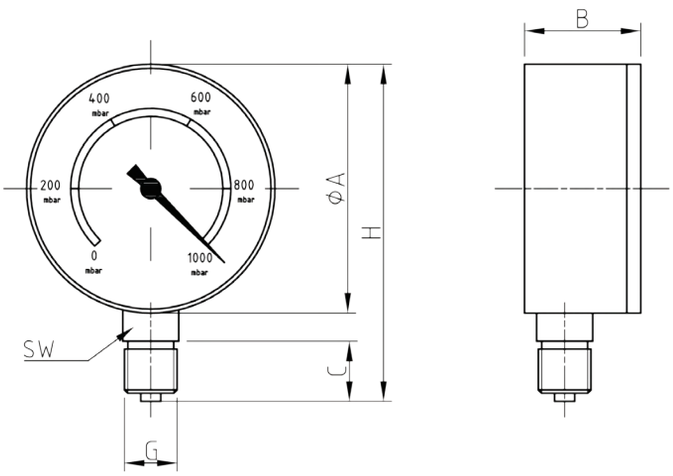

Technical data

Order data / Spare parts

Type	A	B	C	H	G	SW	Weight	Part number
BVG-HV 40 bottom	40	23	12	58	1/8“	12	0,065 kg	BVG.014
BVG-HV 40 back	40	35	12	-	1/8“	12	0,078 kg	BVG.013
BVG-HV 40 front	40	35	12	-	1/8“	12	0,127 kg	BVG.012
BVG-HV 63 bottom	62	29	15	84	1/4“	14	0,128 kg	BVG.001
BVG-HV 63 back	62	50	15	-	1/4“	14	0,131 kg	BVG.002
BVG-HV 100 back	99	60	22	-	1/2“	14	0,262 kg	BVG.004
BVG-HV 100 bottom	99	31,5	22	133	1/2“	22	0,310 kg	BVG.006

Product description

Transport rollers with quick clamping system are usable on roller conveyors where the currently installed rolls have to by changed often due to cut or burn surface as example. Currently it is very time consuming to change rolls, most of the time the complete axe has to be exchanged. The here shown transport rollers are in two section and mounted be means of 2 screw very quickly. There are different types of rollers available, depending the axe diameter and the outside diameter of the roller. The inner core is made from (PP) Polypropylene, the top surface is made from Thermoplastic (TPE).

Product picture



Technical drawing

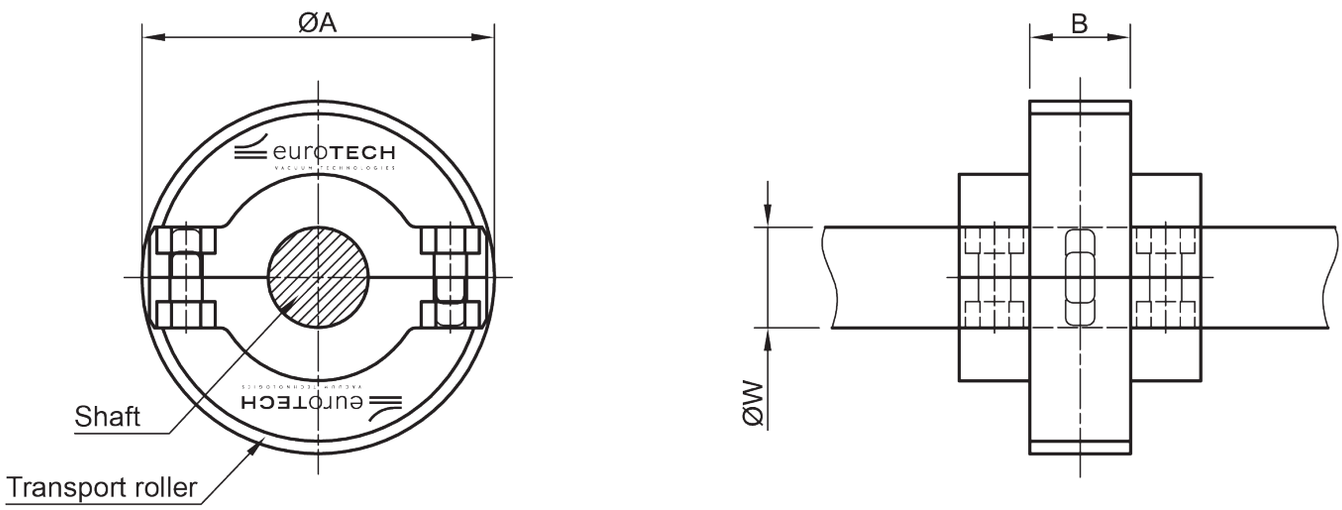

Order data / Spare parts

ØA	ØW	B	Part number
70 mm	min. 20 mm	20	NKR.070.20.521.00
	max. 30 mm		NKR.070.30.521.00
75 mm	min. 20 mm		NKR.075.20.521.00
	max. 30 mm		NKR.075.30.521.00
85 mm	min. 20 mm		NKR.085.20.521.00
	max. 30 mm		NKR.085.30.521.00
95 mm	min. 20 mm		NKR.095.20.521.00
	max. 30 mm		NKR.095.30.521.00
100 mm	min. 20 mm		NKR.100.20.521.00
	max. 30 mm		NKR.100.30.521.00
110 mm	min. 20 mm		NKR.110.20.521.00
	max. 30 mm		NKR.110.30.521.00
125 mm	min. 20 mm		NKR.125.20.521.00
	max. 30 mm		NKR.125.30.521.00

Application picture



Product picture



Product description

In order to prevent seal markings on smooth and sensitive surfaces (like soft coated glass) the protection covers Type MTC were developed and patented. An integrated rubber rope secures the protection cover in position. The material used for protection covers is white and causes only a tiny leak between the rubber seal and the work piece. Suitable for suction cup seals with a short rubber lip. Please observe the safety information when installing the MTC onto your lifting device.

Notice: The suction cup covers cannot be used for any kind of suction cup seal. Please contact us for further information. On request we will produce this protection covers in special size, suitable for your seal. Please just send us an example of your seal(s), we will test it for you.

Application picture



Technical drawing

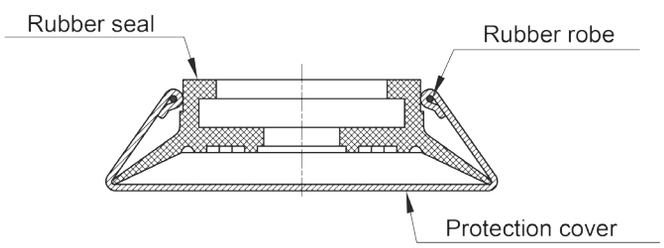

Technical data

Type	ØA	Part number
MTC 1	Ø 100 - 115 mm	MTC.001
MTC 2	Ø 120 - 130 mm	MTC.002
MTC 3	Ø 160 - 190 mm	MTC.003
MTC 4	Ø 210 - 220 mm	MTC.004
MTC 5	Ø 230 - 250 mm	MTC.005
MTC 6	Ø 280 - 320 mm	MTC.006
MTC 7	Ø 330 - 350 mm	MTC.007
MTC 8	Ø 55 - 60 mm	MTC.008
MTC 9	Ø 70 - 80 mm	MTC.009
MTC 10	Ø 360 - 400 mm	MTC.010
MTC 11	55 x 100 mm (L x B)	MTC.011
MTC 12	1250 x 600 mm (L x B)	MTC.012
MTC 13	650 x 550 mm (L x B)	MTC.013
MTC 14	Ø 150 mm	MTC.014
MTC 15	600 x 330 mm (L x B)	MTC.015

Order data / Spare parts

Type	ØA	Part number
MTC 16	700 x 430 mm (L x B)	MTC.016
MTC 17	55 x 200 mm (L x B)	MTC.017
MTC 18	320 x 150 mm (L x B)	MTC.018
MTC 19	500 x 300 mm (L x B)	MTC.019
MTC 20	70 x 170 mm (L x B)	MTC.020
MTC 21	Ø 140 mm (with 5 slots)	MTC.021
MTC 22	20 x 80 mm (L x B)	MTC.022
MTC 23	90 x 190 mm (L x B)	MTC.023
MTC 24	800 x 400 x 20 mm (L x B x H)	MTC.024
MTC 25	600 x 300 mm (L x B)	MTC.025
MTC 26	350 x 350 mm (L x B)	MTC.026
MTC 27	350 x 500 mm (L x B)	MTC.027
MTC 28	360 x 510 mm (L x B)	MTC.028
MTC 29	90 x 250 mm (L x B)	MTC.029
MTC 30	Ø 250 - 280 mm	MTC.030

Product description

This protection cover has been developed for protecting the suction plates or seals during transport of lifting devices from impurities and eventual outside influences.

Product picture



Technical drawing

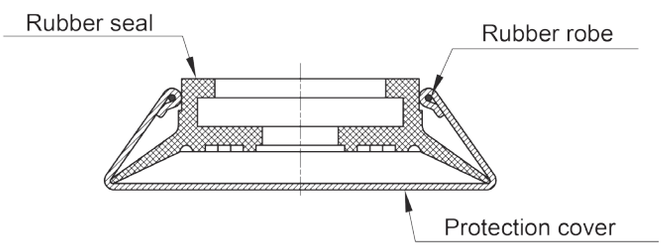

Application picture



Order data / Spare parts

Technical data

Type	ØA	Part number
SSÜZ 1	Ø 115 mm (on request)	SSÜZ.001
SSÜZ 2	Ø 130 mm (on request)	SSÜZ.002
SSÜZ 3	Ø 200 mm (on request)	SSÜZ.003
SSÜZ 4	Ø 220 mm (on request)	SSÜZ.004
SSÜZ 5	Ø 250 mm (on request)	SSÜZ.005
SSÜZ 6	Ø 270 - 300 mm	SSÜZ.006
SSÜZ 7	Ø 350 mm (on request)	SSÜZ.007
SSÜZ 8	Ø 60 mm (on request)	SSÜZ.008
SSÜZ 9	Ø 80 mm (on request)	SSÜZ.009
SSÜZ 10	Ø 360 - 400 mm	SSÜZ.010

Product picture



Product description

The vacuum filters are robust and made from black laquered sheet metal. A paper filter element which can be changed easily by opening the top cover is already installed. The filters increase the durability of the vacuum pumps and valves. The vacuum filters are vacuum sealed up to 95% end vacuum.

Application picture



Technical drawing

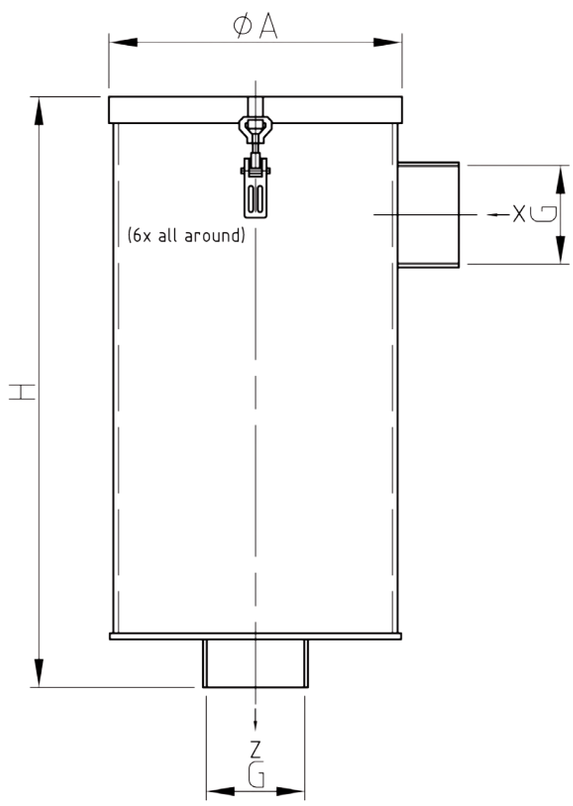

Technical data

Type	A	B	G	H	Volume flow	Weight	Part number	Paper inlet
BVF 1/2“	101	89	1/2“	-	42 cbm/h	0,717 kg	BVF.530.000	PAE.532.005
BVF 3/4“	101	89	3/4“	-	42 cbm/h	0,655 kg	BVF.530.001	PAE.532.005
BVF 1 1/4“ S	135	99	1 1/4“	-	96 cbm/h	1,058 kg	BVF.530.002	PAE.532.002
BVF 1 1/4“ L	173	151	1 1/4“	-	108 cbm/h	1,945 kg	BVF.530.003	PAE.532.003
BVF 1 1/2“	173	196,5	1 1/2“	-	192 cbm/h	2,082 kg	BVF.530.004	PAE.532.013
BVF 2“	200	252	2“	-	310 cbm/h	3,923 kg	BVF.530.005	PAE.532.004
BVF 3“	285	-	3“	507	1080 cbm/h	2,208 kg	BVF.530.006	PAE.532.011
BVF 4“	335	-	4“	675	1260 cbm/h	3,306 kg	BVF.530.007	PAE.532.012
BVF 3/8“	83	80	3/8“	-	12 cbm/h	0,344 kg	BVF.530.022	PAE.532.013

Order data / Spare parts

Product description

The inline fine filters Type BFF are suitable for installation in pipes and tubes with inside thread, in solenoid valves, flow valves or connecting nipples. We recommend the installation of those inline filters to protect valves from any dirt when switching to suction or ventilating the vacuum system. Suitable for the thread sizes in the below stated chart.

Product picture



Technical drawing

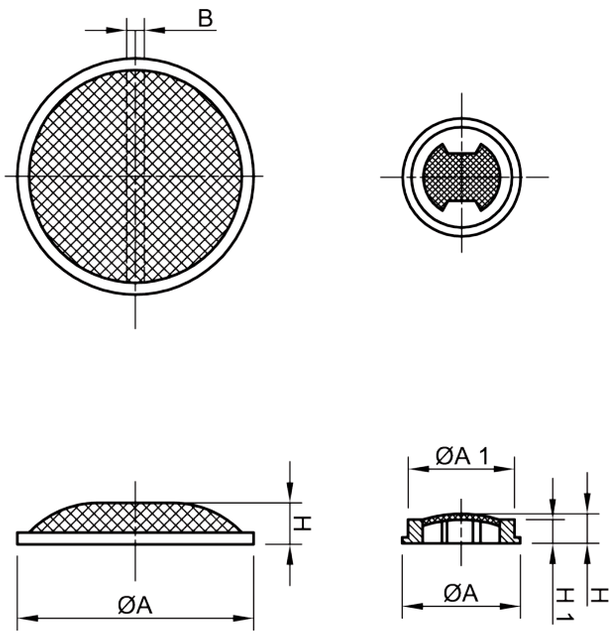

Application picture

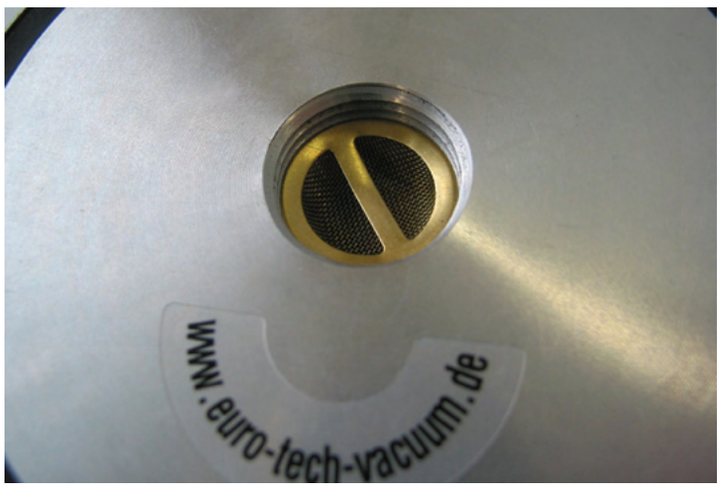

Order data / Spare parts

Technical data

Type	ØA	ØA1	H	H1	Part number
BFF 1/8“	9,70	8,20	4	3	BFF.001
BFF 1/4“	12,70	10,80	4	3	BFF.002
BFF 1/2“	19,80	15,20	6,50	1	BFF.003



Product picture

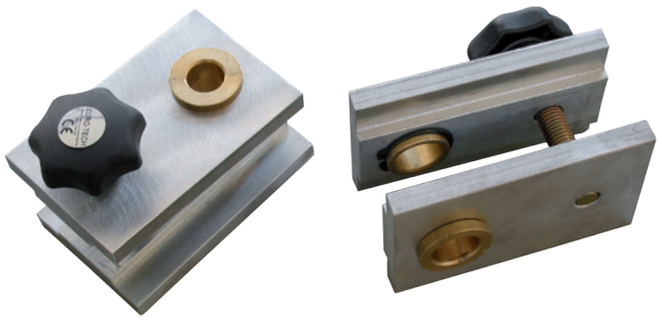

Product description

We reommend the installation of suction cups with aluminum clamping plates Type BCS when the suction cups have a large carrying capacity. Those aluminum clamping plates are installed between 2 profiles. The built-in brass guide assures a precise movement of the suspension bolt. It is possible to change the brass guide cost-savingly.

Application picture

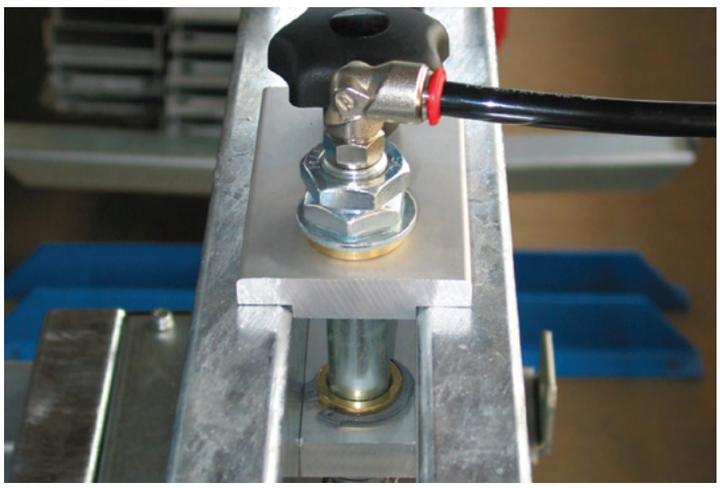



Technical drawing

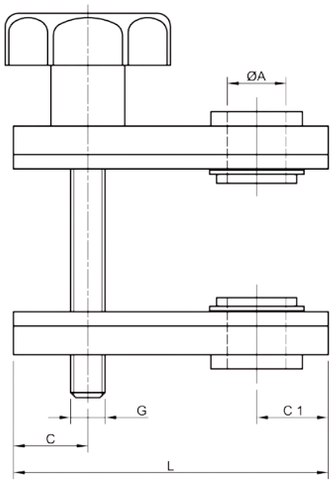

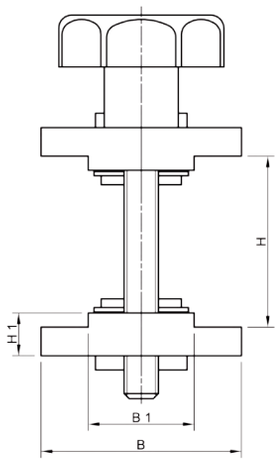

Technical data

Order data / Spare parts

Type	ØA	G	L	L1	L2	H	H1	B	B1	Weight	Part no.
BCS 1	20,5	M12	110	26	25	50-70	15	70	37	0,700 kg	BCS.001
BCS 2	20,5	M12	110	26	25	60-100	15	70	37	0,700 kg	BCS.002
BCS 3	16,5	M12	110	26	25	50-70	15	70	37	0,700 kg	BCS.003

Product description

The aluminum flange plate Type FPH is made from extruded aluminum. The guide tube has two bushes suitable to fit a suspension bolt with a diameter of 20 mm. The guide bushings are made of oil-soaked sintered bronze.
Because the flange plates can be mounted multifunctional, the hole center distance is variable. We will manufacture the flange plate on request.

Product picture



Technical drawing

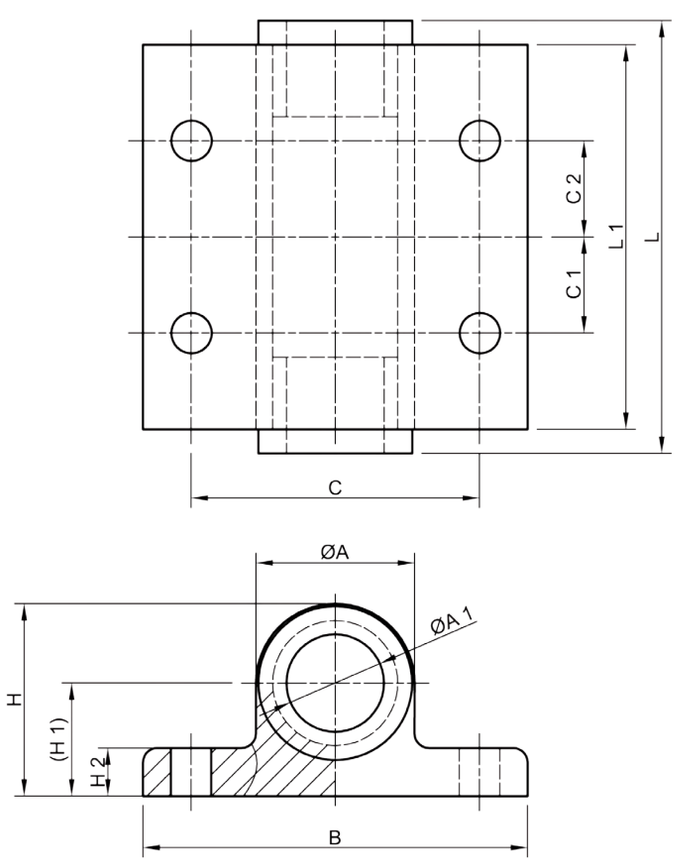

Application picture



Order data / Spare parts

Technical data

Type	ØA	ØA1	B	L	L1	H	H1	H2	C	C1	C2	Weight	Part number
FPH 3	33	20,3	80	90	80	40	23,5	10	60	20	20	0,312 kg	FPH.003
FPH 4	33	20,3	80	120	110	40	23,5	10	50	12,5	32,5	0,391 kg	FPH.004
FPH 6	33	20,3	80	90	80	40	23,5	10	60	15	15	0,312 kg	FPH.006
FPH 9	33	20,3	80	90	80	40	23,5	10	60	22,5	22,5	0,312 kg	FPH.009
FPH 13	33	20,3	80	60	50	40	23,5	10	30	-	-	0,240 kg	FPH.013
FPH 14	33	20,3	80	100	90	40	23,5	10	60	22,5	22,5	0,338 kg	FPH.014

Product picture



Product description

The aluminum cross clamping pieces series BCCP are made of aluminum with star-knob screw and guide tube. The cross clamping pieces are suitable for suspension bolts Ø 16 mm or Ø 20 mm. The guide bushings are made of POM, the guide tubes Ø 20 mm are also made of oil-soaked sintered bronze. As a result of the split Type of construction, the profiles can be installed very quickly, even on closed frames.

- intermediate size are avaible -

Application picture

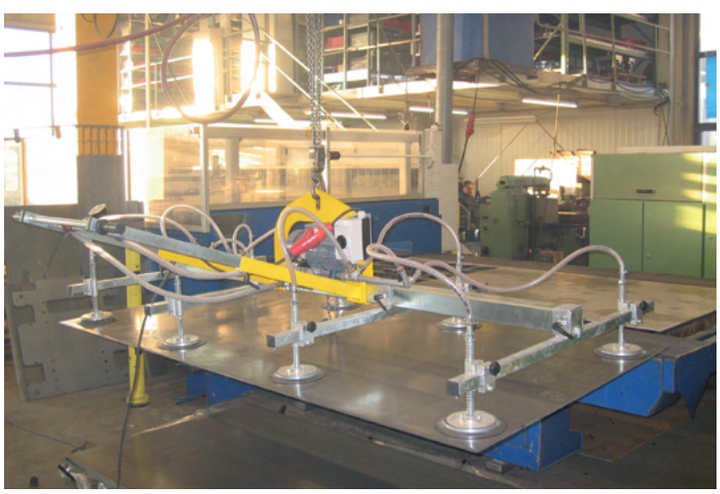

Technical drawing

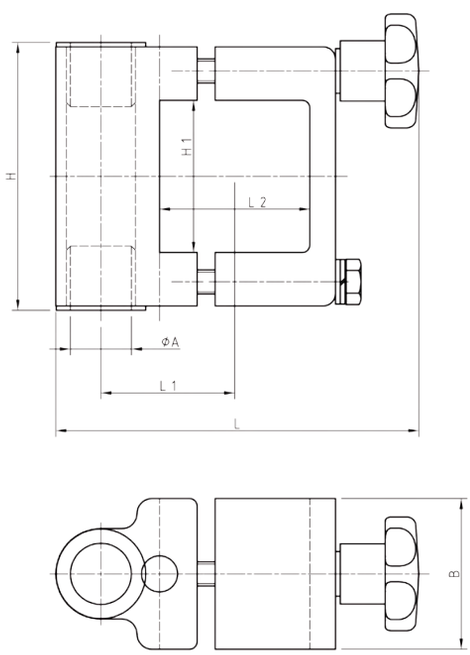

Technical data

Order data / Spare parts

Type	ØA	H	H1	L	L1	L2	Buchse	Weight	Part number
30x30 / 16 G	16,3	78	30,5	74	34,5	30	POM	0,439 kg	BCCP.014
40x40 / 16 G	16,3	78	40,5	84	39,5	40	POM	0,452 kg	BCCP.015
50x50 / 16 G	16,3	88	50,5	93	44,5	50	POM	0,526 kg	BCCP.030
30x30 / 20 G	20,3	78	30,5	78	49,5	30	POM	0,439 kg	BCCP.016
40x40 / 20 G	20,3	78,9	40,5	84	39,5	40	POM	0,451 kg	BCCP.017
50x50 / 20 G	20,3	88,9	50,5	93	44,5	50	POM	0,510 kg	BCCP.019
60x60 / 20 G	20,3	98,9	60,5	102,5	49,5	60	POM	0,604 kg	BCCP.020
30x30 / 20 SB	20,4	86	30,5	77	36	30	Sintered bronze	0,540 kg	BCCP.026
40x40 / 20 SB	20,4	86	40,5	87	41	40	Sintered bronze	0,540 kg	BCCP.021
50x50 / 20 SB	20,4	96	50,5	96	46	50	Sintered bronze	0,600 kg	BCCP.027
60x06 / 20 SB	20,4	106	60,5	105,5	51	60	Sintered bronze	0,695 kg	BCCP.029

The technical data has been generated to the best knowledge and with great care and serve only for information. Nevertheless we cannot assume liability for eventual deficits which may be included. For special operation fields/ open-air operation, separate questions must be put. We reserve technical changes.

Product description

The steel cross clamping pieces series BCCP are made of galvanised steel and have a guide tube. The cross clamping pieces are suitable for suspension bolts Ø 20 mm. The guide bushings are made of oil-soaked sintered bronze. As a result of the split Type of construction, the profiles can be installed very quickly even on closed frames. These cross clamping pieces are suitable for frame profiles with the measures 50 x 50 mm and 50 x 100 mm.

Product picture

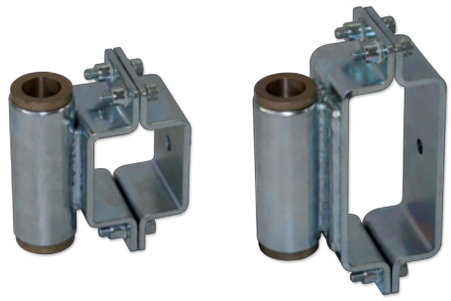

Technical drawing

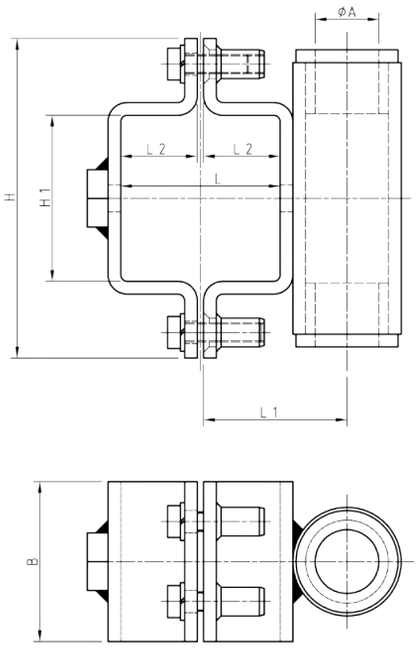

Application picture

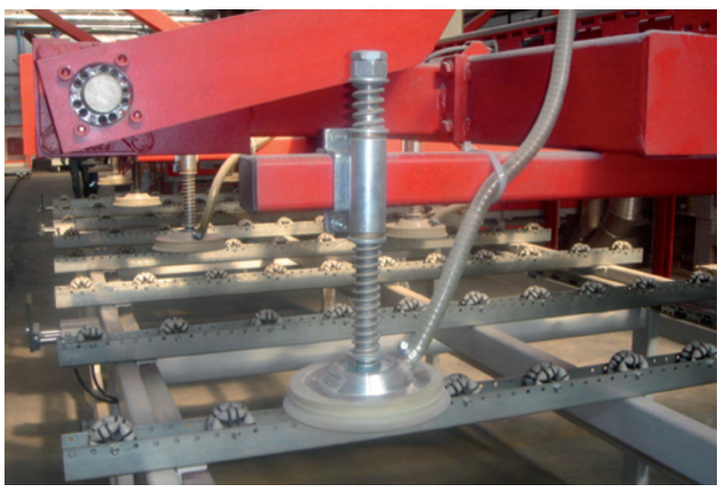

Order data / Spare parts

Technical data

Type	ØA	B	H	H1	L	L1	L2	Buchse	Weight	Part number
50 x 50	20	50	100	52	50	45	24	Sintered bronze	0,808 kg	BCCP.062
50 x 100	20	50	100	102	50	49	24	Sintered bronze	1,080 kg	BCCP.069

The technical data has been generated to the best knowledge and with great care and serve only for information. Nevertheless we cannot assume liability for eventual deficits which may be included. For special operation fields/ open-air operation, separate questions must be put. We reserve technical changes.

Product picture



Product description

The water separators series BWS are available in three sizes. They are made of aluminum pressure casting, the transparent catch bowl is made of polycarbonate. The drain plug is on the bottom with which the separated water can drain of. By using a water separator an intrusion of water in the vacuum reservoir can be prevented.

Catch bowl capacity: max. 90 ml

Application picture



Technical drawing

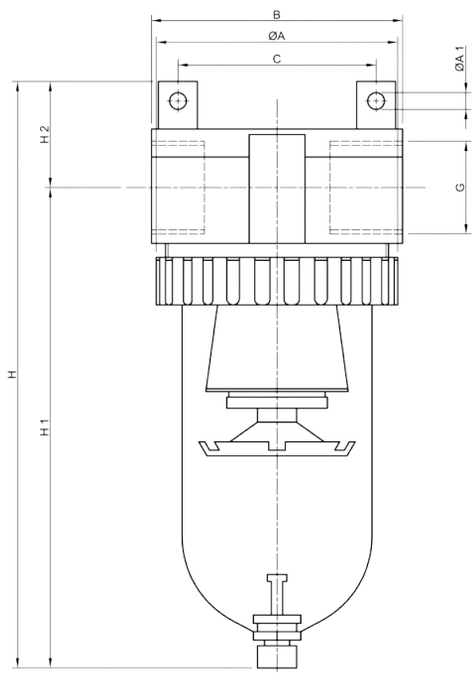

Technical data

Type	ØA	B	B1	H	H1	H2	ØA1	G	Weight
BWS 1	86,5	90	71	210	172	38	6	1/2“	1,240 kg
BWS 2	86,5	90	71	210	172	38	6	3/4“	1,240 kg
BWS 3	86.5	90	71	210	172	38	6	1“	1,200 kg
BWS 4	36,6	40	-	97,5	87,5	10,0	-	1/8“	0,098 kg

Order data / Spare parts

Type	Part number Water separator
BWS 1	BWS.001
BWS 2	BWS.002
BWS 3	BWS.003
BWS 4	BWS.004

Accessoires
Mounting bracket for Type BWS 4
Part number: BWS.004.00



Product description

The 3-2 way hand slide valves series BHSV are made of brass with nickel-plated surface and catch advantageous aluminum slide. The hand slide valve Type BHSV 6 is delivered with security push button to prevent accidental ventilating.
The hand slide valves are suitable for opening and closing of vacuum distributors e.g. at vacuum lifting devices.

Product picture



Technical drawing

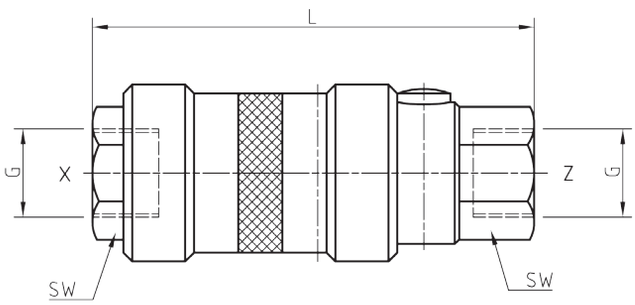

Z= zum Vakuumerzeuger / to the vacuum pump
X= zum Verbraucher / consumption side

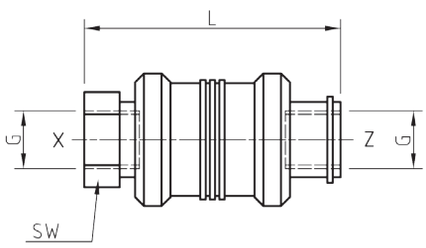

Application picture

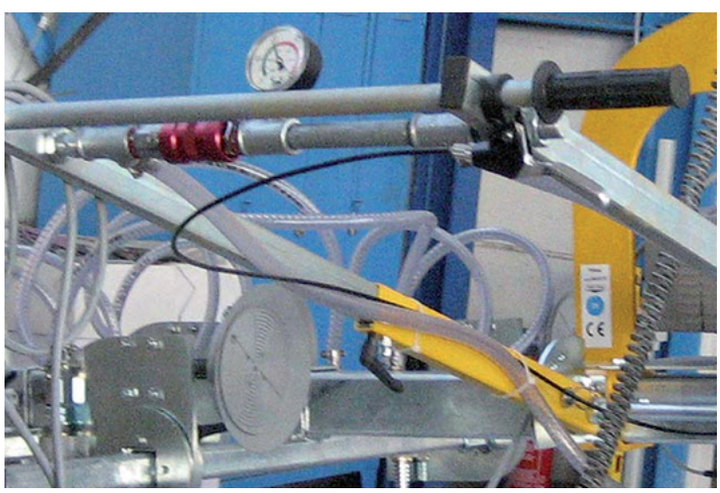

Order data / Spare parts

Technical data

Type	L	G	SW	Push button	Weight
BHSV 1	58	1/4“	19	no	0,097 kg
BHSV 2	80	1/2“	27	no	0,214 kg
BHSV 3	75	3/4“	36	no	0,382 kg
BHSV 4	80	3/8“	27	no	0,153 kg
BHSV 5	48	1/8“	14	no	0,052 kg
BHSV 6	100	1/2“	27	yes	0,366 kg

Type	Part number Hand slide valve	Type	Part number Hand slide valve
BHSV 1	BHSV.001	BHSV 2	BHSV.002
BHSV 3	BHSV.003	BHSV 4	BHSV.004
BHSV 5	BHSV.005	BHSV 6	BHSV.006

Product picture



Product description

Aluminum ejector with build in brass nozzle, exit silencer and build in non return valve. In case of pressure failure, the work piece will still be clamped safely. Additional there is an pressure connection which can be used for „quick blow off impulse“ to release the work piece quickly. Very often those ejectors are installed in vacuum lifting devices and each suction plate is equipped with one ejector for maximum safety.

- Used in Armatec vacuum lifters -

Technical drawing

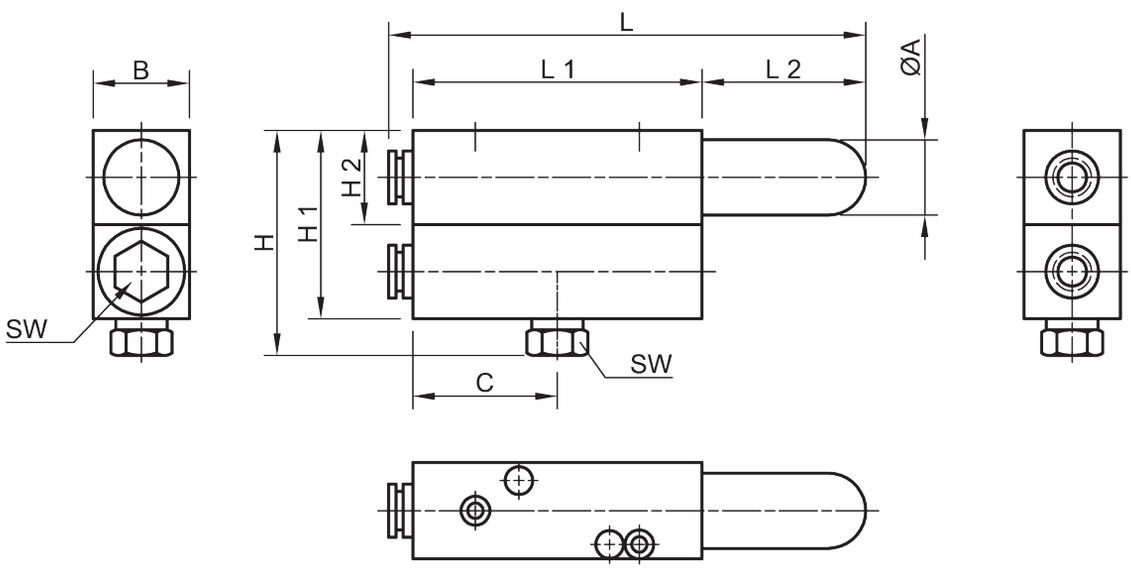

Technical data

Type	Air consumption	Vacuum flow	End vacuum	Vacuum switch	Weight	Part number
VEES-A10	13 Litre/Minute	10 Litre /Minute	80 %	nein	0,766 kg	VEES.001

Order data / Spare parts

Type	ØA	L	L1	L2	B	H	H1	H2	C	SW
VEES-A10	15,6	99	60	34	20	46,5	39	19,5	30	11

Product description

There are four types of Aluminum ejector with build in brass nozzle available. All four ejectors have an build in non return valve. In case of pressure failure, the work piece will still be clamped safely. Additional there is an pressure connection which can be used for „quick blow off impulse“ to release the work piece quickly (an add. pressure valve is necessary). Very often those ejectors are installed in vacuum lifting devices and each suction plate is equipped with one ejector for maximum safety.

- Used in Hegla Vacuum lifters -

Product picture



Technical drawing

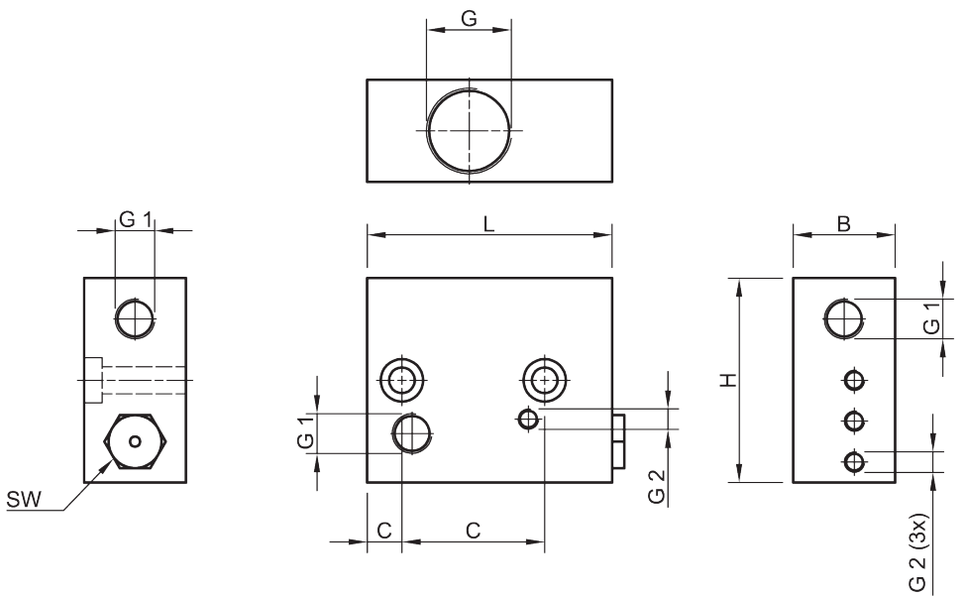

Order data / Spare parts

Technical data

Type	Air consumption	Vacuum flow	End vacuum	Vacuum switch	Part number
AV2 / BV20	20 Liter/Minute	25 Liter/Minute	79 %	no	EJ-AV2-BV20
AV2 / BV30	30 Liter/Minute	34 Liter/Minute	79 %	no	EJ-AV2-BV30
AV2 / BV40	40 Liter/Minute	37 Liter/Minute	79 %	no	EJ-AV2-BV40
AV2 / BV60	60 Liter/Minute	60 Liter/Minute	79 %	no	EJ-AV2-BV60

Type	L	B	H	G	G1	G2	C	C1	Weight
AV2 / BV20	60	25	50	1/2“	1/4“	M5	35	8,5	0,180 kg
AV2 / BV30	60	25	50	1/2“	1/4“	M5	35	8,5	0,185 kg
AV2 / BV40	60	25	50	1/2"	1/4"	M5	35	8,5	0,190 kg
AV2 / BV60	60	25	50	1/2"	1/4"	M5	35	8,5	0,195 kg

for more interessting - please contact us...





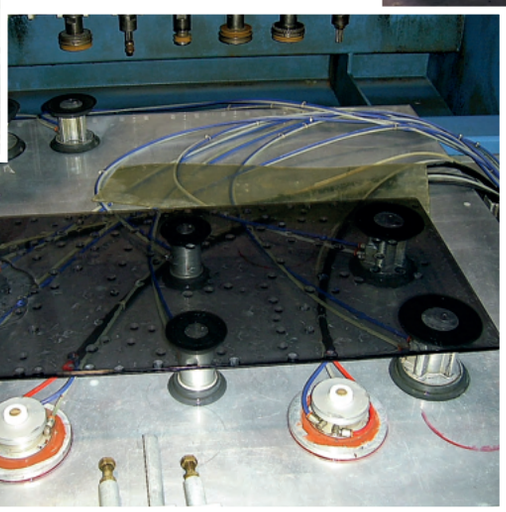



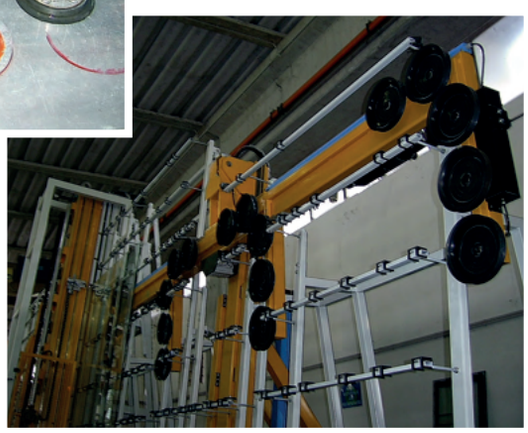

www.eurotech-vacuum-technologies.com

EUROTECH
VACUUM TECHNOLOGIES CO., LTD.
Vacuum, Lifting and Transporting Techniques

178 Da-Pong Road.
Xi-tun Dist. 40754 Taichung.
Taiwan

Telephone: 886 - 4- 2297 2899
Telefax: 886 - 4- 2291 6211
E-Mail: info@eurotech-vacuum-technologies.com
Internet: http://www.eurotech-vacuum-technologies.com

- Standard range of vacuum components for transfer stations
- Development and manufacture of suction pad assemblies, suction boxes and vacuum systems
- Clamping blocks for CNC machines
- Mould design & production for customised rubber solutions
- Vacuum lifting equipment & crane systems
- Vacuum components for the solar technology