euroTECH

VACUUM TECHNOLOGIES

Main catalogue









Imprint

Publisher

eurotech Vertriebs GmbH
VACUUM TECHNOLOGIES

Dammstr. 1
72351 Geislingen
GERMANY

Telephone: +49 7433 9046 8-0
Telefax: +49 7433 9046 8-13
E-Mail: info@euro-tech-vacuum.de
Internet: www.euro-tech-vacuum.com

Copyright © 2011-2015

The complete content of this catalogue is subject to the copyright of eurotech Vertriebs GmbH VACUUM TECHNOLOGIES. It is not allowed to use any content without the explicit allowance of this company.

Reservation

Subject to change in accordance with technical advances!

Main contents

Introduction 4

00

Suction plates 10
Standard suction plates with suspension bolt 12
Suction plates type Pressmaster 51
Further suction plates 60

01

Flat suction cups 76
Flat suction cup ranges and types 78

02

Bellow suction cups 86
Bellow suction cup ranges and types 88

03

Vacuum generators 106
Ejectors 108
Vacuum pumps 114
Side channel blower / Fan 118
Vacuum pumps with reservoir 122

04

Accessories 124
Accessories for vacuum components 126
Valve technology 144
Filter technology 157
Control, measuring and monitoring 162
Connection technology 168
Vacuum generation 179

05

Further product range 180
Suction boxes 182
Lifting devices 184
Tube lifter 186

06

What is vacuum?

Taken literally, vacuum in physics describes the absence of material. However, a space that is completely free of materials has not yet been found in the entire universe. In common speech, the word "vacuum" is used for a space that is virtually free of air. If the remaining pressure is only slightly lower than the atmospheric pressure, the correct term is not "vacuum" but "underpressure". It is also important to remember that the ambient air pressure around us is dependent on the weather and altitude.

A typical value that is frequently specified for this is the standard atmospheric pressure of 101.325 pa (approx. 1 bar), which corresponds to a mass per unit area of around 1 kg/cm². This pressure is caused by the air masses in the atmosphere: the higher you are, the lower the air column above you and therefore the lower the air pressure. Because everything around us is ultimately exposed to this air pressure, it is generally not perceived as such.

The first attempts to provide evidence of vacuums were carried out by Otto von Guericke. An air pump was used to remove the air from two hemispheres ("Magdeburg hemispheres"). 16 horses were then used to attempt to pull the spheres apart. However, the ambient air pressure pushed them together so strongly that it was impossible to separate them. This principle is also used to lift and hold elements using a vacuum. You are also exploiting the fact that the ambient pressure joins the workpiece that is to be lifted to the suction plate relatively firmly.

In the vacuum handling technology sector, we operate exclusively in underpressure areas, which are designated as low vacuums in technical literature (<99%). A higher vacuum would simply be uneconomical for handling tasks and would be disproportionate to the higher holding power. When classifying, you talk of low vacuum below 60% and high vacuum from 60% onwards.



In the "Magdeburg hemispheres" experiment by Otto von Guericke in 1657, the air in the sphere was removed using a pump so that there was no longer any air pressure inside the sphere (vacuum). The outside air pressure pushed the hemispheres together so strongly that they could not even be separated using the pulling force of 16 horses.

Vacuum generators

The most important vacuum generators are as follows:

Vacuum pump to generate differential pressure in a sealed space (similar to a compressor). This generates a relatively high final vacuum (max. 99.9%). There are various designs. Dry-running and circular oil lubricated rotary vane pumps, claw pumps, liquid ring and screw pumps. Rotary vane pumps and claw pumps are the most reliable pumps in handling technology.

The **side channel blower/compressor** generates a differential pressure in which large quantities of air can be moved (similar to a vacuum cleaner). The underpressure that is generated is in the lower range (max. -450 mbar). There are single-stage and double-stage compressors. The difference is the underpressure that can be achieved (single-stage up to a maximum of -250 mbar, double-stage up to a maximum of -450 mbar).

According to Wikipedia, an **ejector** is a jet pump that generates underpressure and that therefore has a predominantly sucking effect. This is widely used in vacuum technology. Ejectors are commonly used in the packaging industry. They are cheap to manufacture and acquire. They are relatively expensive to operate due to their high compressed air consumption.

Characteristics	Vacuum pumps	Blowers	Ejectors
Final vacuum*	very high	low to medium	medium/ high
Suction volume*	low to high	high to very high	medium/ high
Maintenance	low/high	low	low
Porous material	conditionally suited	well suited	conditionally suited
Glossy material	very well suited	very suited	very suited
Noise emmision	low to medium	high	high
Energy consumption*	medium to high	medium to high	high to very high

* related to the input

Seals

Seals of various sizes and made of various materials are used depending on the surface and the area of application. The shape of the base surface (round, oval, rectangular), the type of supporting surface (grooves, burls, support bars) and the internal volume of the seal play a major role.
We cannot provide a general statement on which seal is best for which application situation. The correct material to be selected depends on the specific application situation.

Seal designs

There are multiple ways of joining the seal to the base plate or the suspension:

- ***Vulcanising the seal onto a base plate***
  The seal and the base plate are joined together and cannot be separated. If the seal wears out, the base plate has to be replaced as well.

- ***Sticking the seal onto a base plate***
  The seal is stuck to the base plate using special glues. Unsealing the joint can cause the seal to be destroyed depending on the seal's material.

- ***Rolling the seal onto a base plate***
  The seal is pulled over the base plate and is held in place by internal stress. The seal can be replaced quickly and without replacing the base plate.

- ***Clamped seal***
  The seal is fixed between an upper and a lower clamping plate. The seal can be replaced by removing one half of the clamping system. This method of clamping is mainly used for small suction cups via a connecting nipple and for very large suction cups via a sandwich system.

- ***Seal clamped using clamping clip***
  The seal is pulled over the base plate and secured using a clamping clip. This ensures that it is held securely on the base plate. The seal can be replaced quickly and easily by removing the clamping clip.

Seals

► ***Foam and sponge rubber seal strip***
Foam and sponge rubber seals are available as a continuous piece of material and can therefore be adjusted to the required lengths. They are used in our BSPM range and in various clamping systems as seals for suction plates. They are available in various shapes made out of various materials.

Chemical name	NBR Nitrile butadiene rubber	NR Natural rubber	SIR Silicone rubber	FKM (FPM) Fluoro rubber	PUR Poly-urethane	EPDM Ethylene propylene diene monomer rubber	CR Chloroprene rubber
Trade name	NBR	natural rubber	silicone	Viton	PUR	sponge rubber	Neopren
Hardness (Shore-A)	35 to 80	35 to 80	15 to 80	65	65	15	38
Temperature range	-10° to 80° C	-20° to 80° C	-30° to 200° C	-10° to 200° C	-30° to 80° C	-20° to 100° C	10° to 80° C
Abrasion resistance	+	+	+	+-	++	+-	+
Dimensional stability	+	++	+	++	+-	+	+
Ozone resistance	+-	+	++	++	++	++	+-
Oil resistance	++	+-	-	++	++	+-	+-
Fuel resistance	+	-	-	++	+	-	-
Solvent resistance	+	+-	+	++	+-	+	+
Acid resistance	+-	+	+-	++	+-	++	+
Suitable for food	-	-	++	-	-	-	-
Weather resistance	+	+	++	++	++	++	+
Main applications	universal	universal	all, with restriction	universal	universal	universal	universal

(++ very well suited, + well suited, +- suitable, - suitable to only a limited extend, -- unsuitable)

Pressure

Hardly any other physical dimension has as many different units as pressure does. The reasons for this are both the difference between the metric and imperial measurement systems and the various reference values. The absolute zero for pressure (the absolute vacuum) is common to all units. The following table contains the most common dimensions and their conversions into the pascal SI unit. In vacuum handling technology, the pressure units of pascal (Pa) as the SI unit, bar (bar) and the percentage value (s.u.) have become established in Europe.

Relative data for pressure:
In vacuum technology, negative values are normally used for the units specified in the table above (e.g. -600 mbar). Negative pressure is not physically possible. Rather, the negative values are to be understood as the pressure difference from the ambient pressure. Assuming an ambient pressure of 1,000 mbar (just below standard atmospheric pressure), the -600 mbar relative pressure specified above corresponds to an absolute pressure of 400 mbar. In this case, you would often speak of a vacuum of 600 mbar. The relative data is particularly significant for calculating the carrying capacity. The differential pressure (amount of the relative vacuum) is the only piece of data that can be used for calculation as it provides carrying capacity data that does not depend on the attitude of the ambient pressure.

The percentage values are often used for the vacuum and are to be understood in a similar way to the relative data. They compare the underpressure level to the ambient pressure and specify the percentage of real vacuum that is actually reached. At a 60% vacuum, the example above corresponds to an absolute pressure of 400 at 1,000 mbar ambient pressure and therefore a relative pressure of -600 mbar.

At 5,500 m above sea level, the atmospheric pressure is only half as high on average. Therefore, a percentage value for the vacuum refers to a starting value that is half as high at this altitude. In this case, 60% vacuum corresponds to a relative pressure of only -300 mbar as the ambient pressure is only around 500 mbar. This situation must be considered even when using vacuuming handling technology at low altitudes because the carrying capacity also is reduced when the vacuum is lower. Therefore, percentage values must sometimes be taken with caution.

Examples:
Ambient pressure: 1.000 mbar (just below standard atmospheric pressure)
60 % vacuum = -600 mbar (relative) = 400 mbar (absolute)

Ambient pressure: 750 mbar
60% vacuum = -450 mbar (relative) = 300 mbar (absolute)

Ambient pressure: 500 mbar
60 % Vakuum = -300 mbar (relative) = 200 mbar (absolute)

Unit	Unit symbols	Value for standard atmospheric pressure	Conversion (to Pa)
pascal (SI-Unit)	Pa	101.325 Pa	-
bar	bar	1,01325 bar	1 bar = 100.000 Pa
millibar hectopascal	mbar hPa	1.013,25 mbar 1.013,25 hPa	1 mbar = 100 Pa 1 hPa = 100 Pa
physical atmosphere	atm	1 atm	1 atm = 101.325 Pa
technical atmosphere	at	1,03321 at	1 at = 98.067 Pa
torr barometric column in millimetres	Torr mmHg	760 Torr 760 mmHg	1 Torr = 133 Pa 1 mmHg = 133 Pa
barometric column in inches	inHg	29,92 inHg	1 inHg = 3386 Pa
Pound-force per square inch	psi	14,7 psi	1 psi = 6.895 Pa

This results in the following situation (generous rounding for the units atm and at): 100.000 Pa = 1.000 hPa = 1.000 mbar = 1 bar ≈ 1 atm ≈ 1 at
The amount of underpressure for suction cups is in proportion to the amount of holding force and therefore the carrying capacity.

Carrying capacity

According to DIN EN 13155, the carrying capacity specifies the maximum load that a suction cup can carry under the conditions specified by the manufacturer.

The carrying capacity of suction cups is calculated using the following formulas:

Carrying capacity horizontal mH [kg]

$$m_H = \frac{p \times A}{g \times SF}$$

Carrying capacity vertical mV [kg]

$$m_V = \frac{\mu \times p \times A}{g \times SF}$$

p: Differential pressure between ambient pressure and system pressure (corresponds to the amount of the relative vacuum)
[Pa] = [N/m²] = [kg/m x s²]

A: Effective suction area **[m²]**
g: Gravitational acceleration **[m/s²]; g ≈ 9,81 m/s²**
SF: Safety factor (partly dependent on the area of application and on national standards and directives)
µ: Friction coefficient (depends on surface properties, surface pressure, temperature)

The friction coefficients must be considered when calculating vertical carrying capacities. Friction coefficients can be disregarded for horizontal carrying capacities.

A meaningful friction coefficient can only be determined if the general conditions are considered.

The values for the vertical carrying capacity specified in this catalogue always use a friction coefficient of µ = 0.5 and refer to measurements taken on dry glass under lab conditions. The real friction coefficients and the real vertical carrying capacities may differ proportionally from the catalogue data.

Dimensions

The following placeholders are used for dimensioning:

D	outer diameter	**R**	radius
d	inner diameter	**SW**	width across flat
L	length	**Z**	stroke
B	width	**G**	outer thread
H	height	**g**	inner thread
K	thread height		

Physical dimensions	SI-Unit	Other units	Conversion
Length l	m (metre)	“ (inch)	1“ = 2,54 cm = 0,0254 m
Time t	s (seconds)	min, h	1 h = 60 min = 3.600 s
Mass m	kg (kilogramme)		
Force F	N = kg·m / s² (newton)		
Power P	W = N·m (watt)		
Pressure p	Pa = N / m² (pascal)	bar	1 Pa = 0,01 mbar

exemplary control schemes

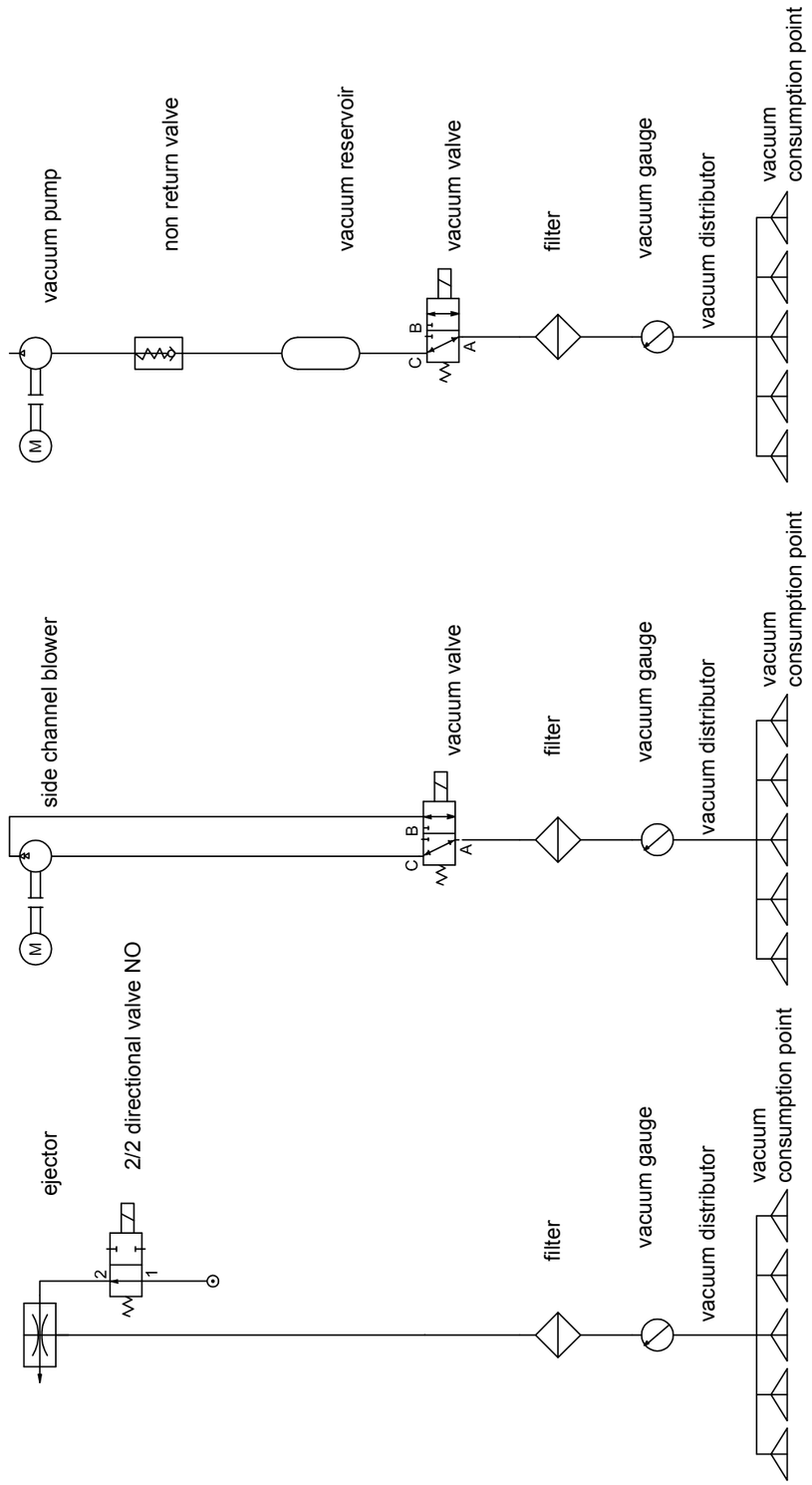

01 Suction plates

Standard suction plates with suspension bolt 12

Series BLSP R 12
Series BSP R, rigid 14
Series BSP R, A-P 16
Series BSP R, R-K 18
Series BLSP RL 20
Series BSP RL, rigid 22
Series BSP RL, A-P 24
Series BSP RL, R-K 26
Series BLSP SCP 28
Series BSP SCP, rigid 29
Series BSP SCP, A-P 30
Series BSP SCP, R-K 31
Series BSP L, A-P 32
Series BSP L, R-K 34
Type BSP 140 D, A-P 36
Type BSP 140 D, R-K 37
Type BSP 180 L, A-P 38
Type BSP 180 L, R-K 39
Type BLSP 180 L 40
Type BLSP 200 PK 41
Type BSP 200 PK, A-P 42
Type BSP 200 PK, R-K 43
Series BSPM, A-P 44
Type BSP 250 L, R-K 45
Type BSP 180 L, V+D, A-P 46
Type BSP 250 L, V+D, R-K 47
Series BSP VS 48
Series BSP VS-NO 49
Series BSP Speedmaster PV 50

Suction plates type Pressmaster 51

Series D Pressmaster 51
Type BSP 200 x 350, A-P - Pressmaster 52
Type BSP 200 x 350, R-K - Pressmaster 53
Type BSP 160 R, rigid - Pressmaster 54
Type BSP 160 R, R-K - Pressmaster 55
Type BSP 160 SOF - Pressmaster 56
Type BSP 160 R-SOF - Pressmaster 57
Series Pressmaster A-P 58
Series Pressmaster R-K 59

Further suction plates 60

Series BSP SO 60
Type BLSP 135 W 61
Series BLSP HE 62
Type BLSP 160 BY 63
Series BLSP CO 64
Series BLSP NO 65
Series BLSP 115 TR 66
Series BLSP DDK 67
Series BLSP L 68
Series BLSP oval 70
Type BLSP 180 x 580 L 72
Type BLSP 410 x 810 XXL 73
Type BLSP 380 x 500 XL 74
Type BLSP 350 x 600 XL 75

General information



- universally applicable suction plate for smooth surfaces
- Diameter: 110 mm, 160 mm and 250 mm
- short sealing lip and groove rubber support
- replaceable seal (clamped with clamping clip)
- aluminium or steel base plate
- drilling template available on customer request

Example use

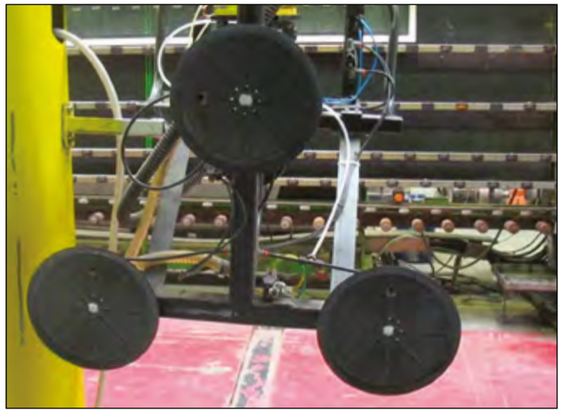

Order data

Type	Material	Article number		
		Suction plate	Replacement seal	Clamping clip
BLSP 110 R	NBR black	BLSP.110.111.000	BSPS.10.001	BSPS.11.001
BLSP 110 R	NBR grey	BLSP.110.121.000	BSPS.10.002	BSPS.11.001
BLSP 110 R	SIR transparent	BLSP.110.241.000	BSPS.10.003	BSPS.11.001
BLSP 160 R	NBR black	BLSP.160.111.000	BSPS.10.009	BSPS.11.002
BLSP 160 R	NBR grey	BLSP.160.121.000	BSPS.10.010	BSPS.11.002
BLSP 160 R	SIR transparent	BLSP.160.241.000	BSPS.10.011	BSPS.11.002
BLSP 250 R	NBR black	BLSP.250.111.000	BSPS.10.024	BSPS.11.003
BLSP 250 R	NBR grey	BLSP.250.121.000	BSPS.10.025	BSPS.11.003
BLSP 250 R	SIR transparent	BLSP.250.241.000	BSPS.10.026	BSPS.11.003

Technical drawing

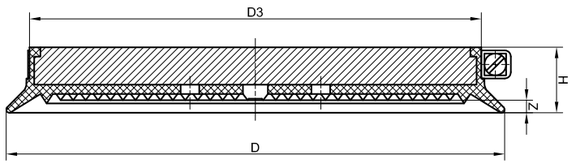

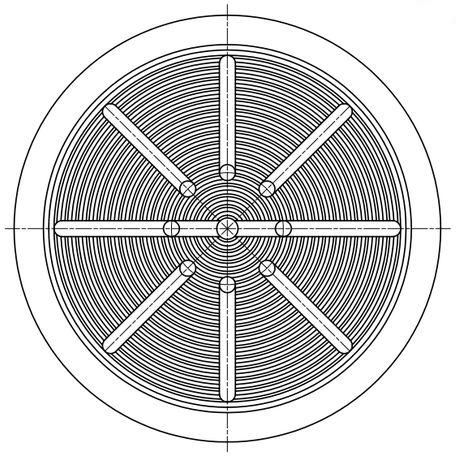

Technical data

Type	D	D3	H	Z	Weight (kg)	Carrying capacity* (kg)	
						vertical	horizontal
BLSP 110 R	110	96	21	4	0,272	25,00	51,00
BLSP 160 R	160	145	21	4	0,666	57,00	115,00
BLSP 250 R	250	236	21	4	1,701	143,00	286,00

*) see page 8

General information



- universally applicable suction plate for smooth surfaces
- Diameter: 110 mm, 160 mm and 250 mm
- short sealing lip and groove rubber support
- replaceable seal (clamped with clamping clip)
- aluminium base plate with rigid suspension
- central vacuum feed through the suspension bolt
- suspension bolts available in various sizes

Example use

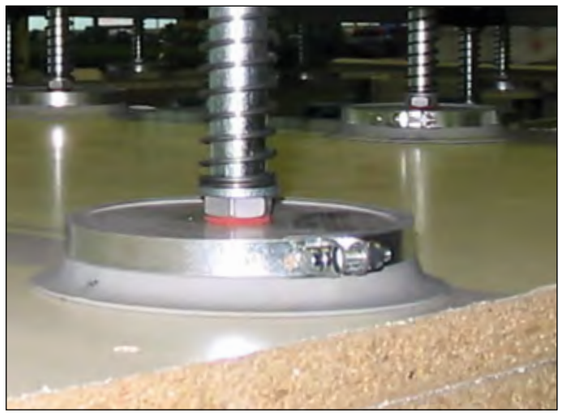

Order data

Type	Material	Article number		
		Suction plate	Replacement seal	Clamping clip
110 R, rigid	NBR black	BSP.110.111.ST.000	BSPS.10.001	BSPS.11.001
110 R, rigid	NBR grey	BSP.110.121.ST.000	BSPS.10.002	BSPS.11.001
110 R, rigid	SIR transparent	BSP.110.241.ST.000	BSPS.10.003	BSPS.11.001
160 R, rigid	NBR black	BSP.160.111.ST.000	BSPS.10.009	BSPS.11.002
160 R, rigid	NBR grey	BSP.160.121.ST.000	BSPS.10.010	BSPS.11.002
160 R, rigid	SIR transparent	BSP.160.241.ST.000	BSPS.10.011	BSPS.11.002
250 R, rigid	NBR black	BSP.250.111.ST.000	BSPS.10.024	BSPS.11.003
250 R, rigid	NBR grey	BSP.250.121.ST.000	BSPS.10.025	BSPS.11.003
250 R, rigid	SIR transparent	BSP.250.241.ST.000	BSPS.10.026	BSPS.11.003

Technical drawing

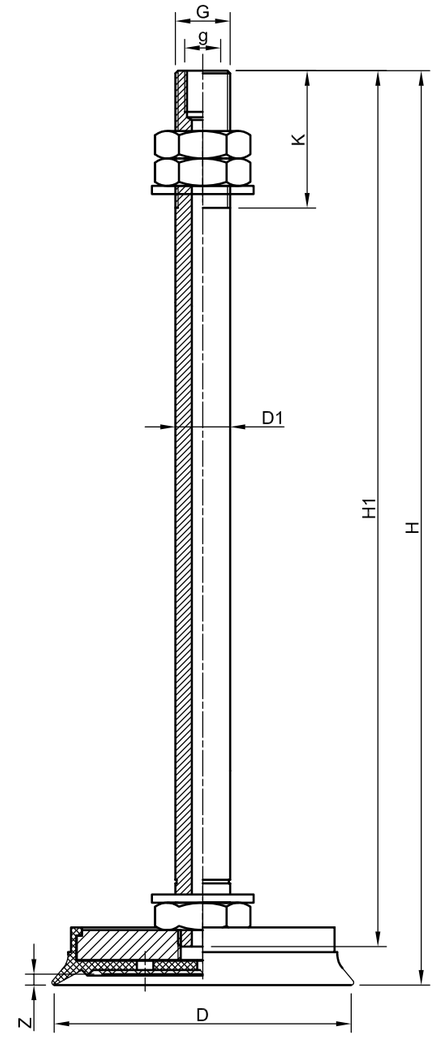

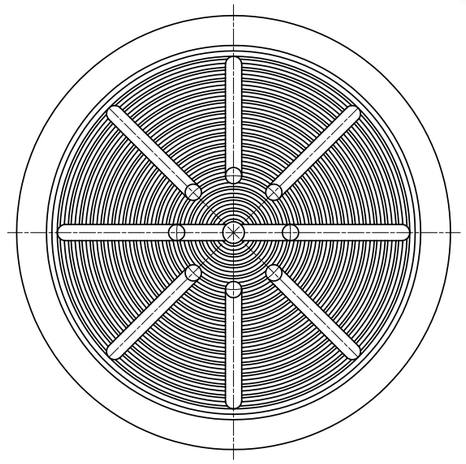

Technical data

Type	D	D1	G	g	H	H1	K	Z	Weight (kg)	Carrying capacity* (kg)	
										vertical	horizontal
110 R, rigid	110	20	M 20	1/4“	276	249	25	4	0,840	25,00	51,00
160 R, rigid	160	20	M 20	1/4“	276	249	25	4	1,234	57,00	115,00
250 R, rigid	250	20	M 20	1/4“	276	249	25	4	2,270	143,00	286,00

*) see page 8

General information



- universally applicable suction plate for smooth surfaces
- Diameter: 110 mm, 160 mm and 250 mm
- short sealing lip and groove rubber support
- replaceable seal (clamped with clamping clip)
- aluminium base plate with A-P suspension:
  10° pivoting on all sides
- central vacuum feed through the suspension bolt
- suspension bolts available in various sizes

Example use



Order data

Type	Material	Article number		
		Suction plate	Replacement seal	Clamping clip
110 R, A-P	NBR black	BSP.110.111.AP.000	BSPS.10.001	BSPS.11.001
110 R, A-P	NBR grey	BSP.110.121.AP.000	BSPS.10.002	BSPS.11.001
110 R, A-P	SIR transparent	BSP.110.241.AP.000	BSPS.10.003	BSPS.11.001
160 R, A-P	NBR black	BSP.160.111.AP.000	BSPS.10.009	BSPS.11.002
160 R, A-P	NBR grey	BSP.160.121.AP.000	BSPS.10.010	BSPS.11.002
160 R, A-P	SIR transparent	BSP.160.241.AP.000	BSPS.10.011	BSPS.11.002
250 R, A-P	NBR black	BSP.250.111.AP.000	BSPS.10.024	BSPS.11.003
250 R, A-P	NBR grey	BSP.250.121.AP.000	BSPS.10.025	BSPS.11.003
250 R, A-P	SIR transparent	BSP.250.241.AP.000	BSPS.10.026	BSPS.11.003

Technical drawing

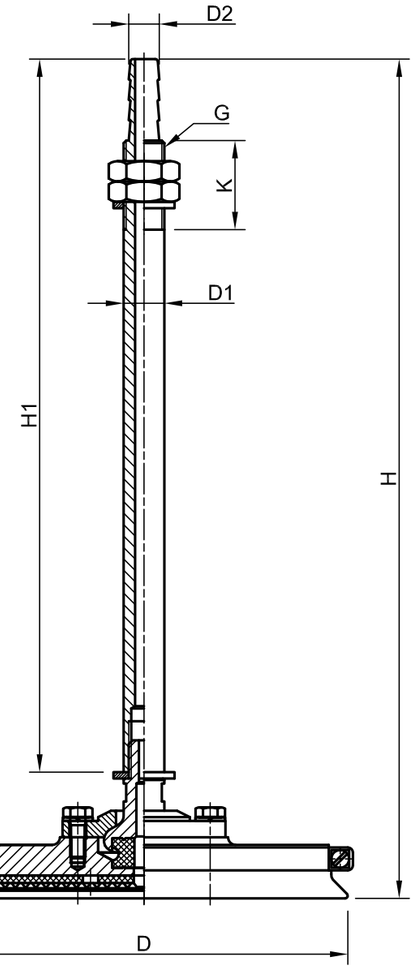

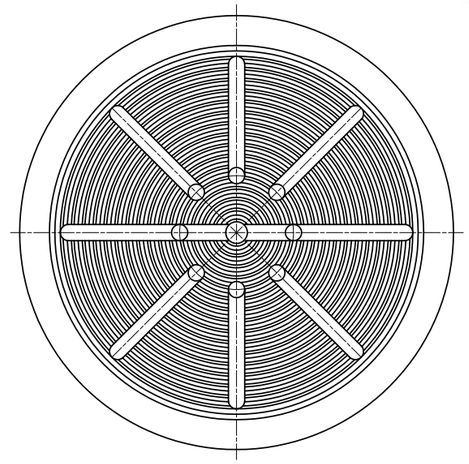

Technical data

Type	D	D1	D2	G	H	H1	K	Z	Weight (kg)	Carrying capacity* (kg)	
										vertical	horizontal
110 R, A-P	110	16	12	M 16	330	280	34	4	0,730	25,00	51,00
160 R, A-P	160	16	12	M 16	330	280	34	4	1,074	57,00	115,00
250 R, A-P	250	20	14	M 20	376	311	59	4	2,666	143,00	286,00

*) see page 8

General information



- universally applicable suction plate for smooth surfaces
- Diameter: 110 mm, 160 mm and 250 mm
- short sealing lip and groove rubber support
- replaceable seal (clamped with clamping clip)
- aluminium base plate with R-K suspension: 10° pivoting on all sides
- vacuum feed through the base plate
- suspension bolts available in various sizes

Example use



Order data

Type	Material	Article number		
		Suction plate	Replacement seal	Clamping clip
110 R, R-K	NBR black	BSP.110.111.RK.000	BSPS.10.001	BSPS.11.001
110 R, R-K	NBR grey	BSP.110.121.RK.000	BSPS.10.002	BSPS.11.001
110 R, R-K	SIR transparent	BSP.110.241.RK.000	BSPS.10.003	BSPS.11.001
160 R, R-K	NBR black	BSP.160.111.RK.000	BSPS.10.009	BSPS.11.002
160 R, R-K	NBR grey	BSP.160.121.RK.000	BSPS.10.010	BSPS.11.002
160 R, R-K	SIR transparent	BSP.160.241.RK.000	BSPS.10.011	BSPS.11.002
250 R, R-K	NBR black	BSP.250.111.RK.000	BSPS.10.024	BSPS.11.003
250 R, R-K	NBR grey	BSP.250.121.RK.000	BSPS.10.025	BSPS.11.003
250 R, R-K	SIR transparent	BSP.250.241.RK.000	BSPS.10.026	BSPS.11.003

Technical drawing

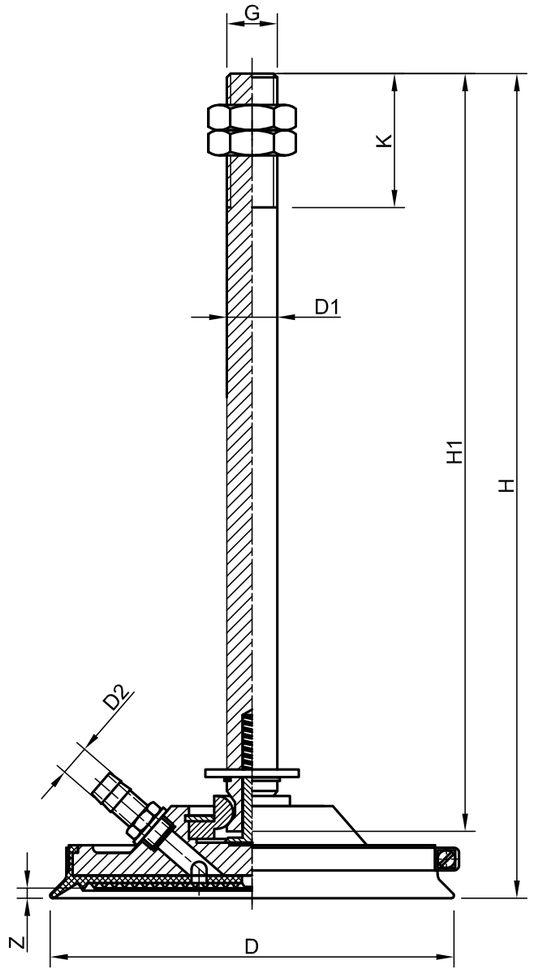

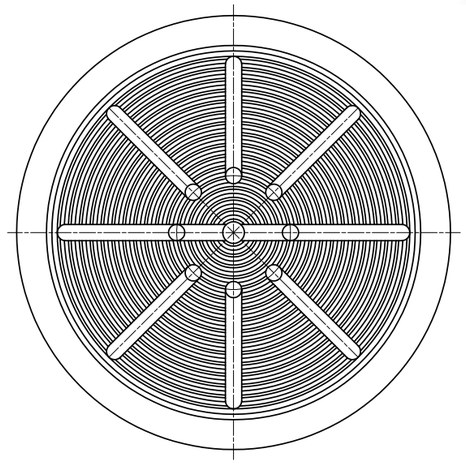

Technical data

Type	D	D1	D2	G	H	H1	K	Z	Weight (kg)	Carrying capacity* (kg)	
										vertical	horizontal
110 R, R-K	110	20	12	M 20	330	300	53	4	1,287	25,00	51,00
160 R, R-K	160	20	12	M 20	330	300	53	4	1,644	57,00	115,00
250 R, R-K	250	20	12	M 20	330	300	53	4	2,708	143,00	286,00

*) see page 8

General information



- universally applicable suction plate for smooth and lightly structured surfaces
- Diameter: 120 mm to 400 mm
- medium-length sealing lip and groove rubber support
- replaceable seal (clamped with clamping clip)
- aluminium or steel base plate
- drilling template available on customer request

Technical drawing

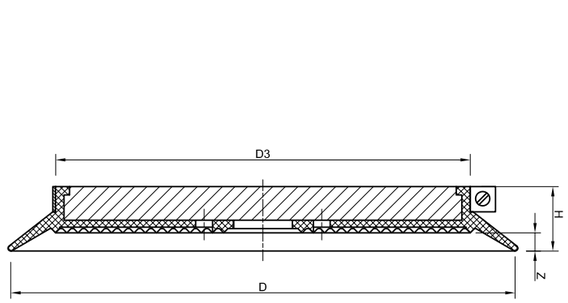

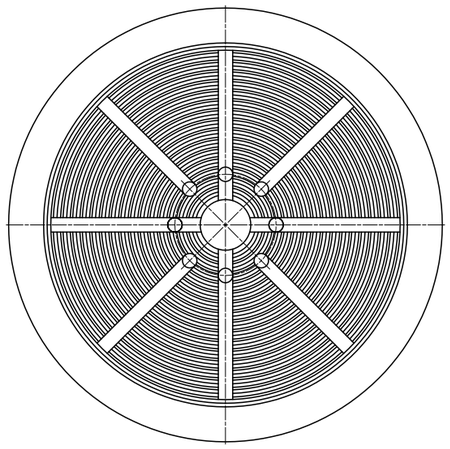

Technical data

Type	D	D3	H	Z	Weight (kg)	Carrying capacity* (kg)	
						vertical	horizontal
BLSP 120 RL	120	96	22	6,0	0,250	29,00	58,00
BLSP 180 RL	180	148	23	6,5	0,650	65,00	130,00
BLSP 200 RL	200	150	30	10,5	0,770	77,00	155,00
BLSP 230 RL	232	198	23	6,5	1,050	116,00	232,00
BLSP 270 RL	270	235	22	6,5	1,750	162,00	324,00
BLSP 290 RL	290	240	30	10,5	1,900	162,00	324,00
BLSP 320 RL	320	270	30	10,5	2,450	223,00	447,00
BLSP 350 RL	350	300	30	10,5	2,900	230,00	461,00
BLSP 400 RL	400	350	30	10,5	3,850	311,00	622,00

*) see page 8

Example use

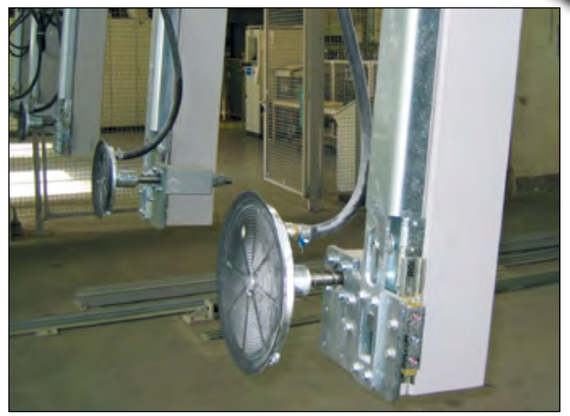

Order data

Type	Material	Article number		
		Suction plate	Replacement seal	Clamping clip
BLSP 120 RL	NBR black	BLSP.120.111.000	BSPS.10.206	BSPS.11.001
BLSP 120 RL	NBR grey	BLSP.120.121.000	BSPS.10.212	BSPS.11.001
BLSP 120 RL	SIR transparent	BLSP.120.241.000	BSPS.10.292	BSPS.11.001
BLSP 180 RL	NBR black	BLSP.180.111.000	BSPS.10.175	BSPS.11.002
BLSP 180 RL	NBR grey	BLSP.180.121.000	BSPS.10.289	BSPS.11.002
BLSP 180 RL	SIR transparent	BLSP.180.241.000	BSPS.10.293	BSPS.11.002
BLSP 200 RL	NBR black	BLSP.202.111.000	BSPS.10.368	BSPS.11.010
BLSP 200 RL	NBR grey	BLSP.202.121.000	BSPS.10.395	BSPS.11.010
BLSP 200 RL	SIR transparent	BLSP.202.241.000	BSPS.10.607	BSPS.11.010
BLSP 230 RL	NBR black	BLSP.230.111.000	BSPS.10.336	BSPS.11.011
BLSP 230 RL	NBR grey	BLSP.230.121.000	BSPS.10.337	BSPS.11.011
BLSP 230 RL	SIR transparent	BLSP.230.241.000	BSPS.10.338	BSPS.11.011
BLSP 270 RL	NBR black	BLSP.270.111.000	BSPS.10.197	BSPS.11.003
BLSP 270 RL	NBR grey	BLSP.270.121.000	BSPS.10.228	BSPS.11.003
BLSP 270 RL	SIR transparent	BLSP.270.241.000	BSPS.10.198	BSPS.11.003
BLSP 290 RL	NBR black	BLSP.290.111.000	BSPS.10.299	BSPS.11.012
BLSP 290 RL	NBR grey	BLSP.290.121.000	BSPS.10.304	BSPS.11.012
BLSP 290 RL	SIR transparent	BLSP.290.241.000	BSPS.10.305	BSPS.11.012
BLSP 320 RL	NBR black	BLSP.320.111.000	BSPS.10.309	BSPS.11.014
BLSP 320 RL	NBR grey	BLSP.320.121.000	BSPS.10.388	BSPS.11.014
BLSP 320 RL	SIR transparent	BLSP.320.241.000	BSPS.10.488	BSPS.11.014
BLSP 350 RL	NBR black	BLSP.350.111.000	BSPS.10.343	BSPS.11.015
BLSP 350 RL	NBR grey	BLSP.350.121.000	BSPS.10.344	BSPS.11.015
BLSP 350 RL	SIR transparent	BLSP.350.241.000	BSPS.10.555	BSPS.11.015
BLSP 400 RL	NBR black	BLSP.400.111.000	BSPS.10.341	BSPS.11.016
BLSP 400 RL	NBR grey	BLSP.400.121.000	BSPS.10.342	BSPS.11.016
BLSP 400 RL	SIR transparent	BLSP.400.241.000	BSPS.10.556	BSPS.11.016

General information



- universally applicable suction plate for smooth and lightly structured surfaces
- Diameter: 120 mm to 400 mm
- medium-length sealing lip and groove rubber support
- replaceable seal (clamped with clamping clip)
- aluminium base plate with rigid suspension
- central vacuum feed through the suspension bolt
- suspension bolts available in various sizes

Order data

Type	Material	Article number		
		Suction plate	Replacement seal	Clamping clip
120 RL, rigid	NBR black	BSP.120.111.ST.000	BSPS.10.206	BSPS.11.001
120 RL, rigid	NBR grey	BSP.120.121.ST.000	BSPS.10.212	BSPS.11.001
120 RL, rigid	SIR transparent	BSP.120.241.ST.000	BSPS.10.292	BSPS.11.001
180 RL, rigid	NBR black	BSP.180.111.ST.000	BSPS.10.175	BSPS.11.002
180 RL, rigid	NBR grey	BSP.180.121.ST.000	BSPS.10.289	BSPS.11.002
180 RL, rigid	SIR transparent	BSP.180.241.ST.000	BSPS.10.293	BSPS.11.002
200 RL, rigid	NBR black	BSP.202.111.ST.000	BSPS.10.368	BSPS.11.010
200 RL, rigid	NBR grey	BSP.202.121.ST.000	BSPS.10.395	BSPS.11.010
200 RL, rigid	SIR transparent	BSP.202.241.ST.000	BSPS.10.607	BSPS.11.010
230 RL, rigid	NBR black	BSP.230.111.ST.000	BSPS.10.336	BSPS.11.011
230 RL, rigid	NBR grey	BSP.230.121.ST.000	BSPS.10.337	BSPS.11.011
230 RL, rigid	SIR transparent	BSP.230.241.ST.000	BSPS.10.338	BSPS.11.011
270 RL, rigid	NBR black	BSP.270.111.ST.000	BSPS.10.197	BSPS.11.003
270 RL, rigid	NBR grey	BSP.270.121.ST.000	BSPS.10.228	BSPS.11.003
270 RL, rigid	SIR transparent	BSP.270.241.ST.000	BSPS.10.198	BSPS.11.003
290 RL, rigid	NBR black	BSP.290.111.ST.000	BSPS.10.299	BSPS.11.012
290 RL, rigid	NBR grey	BSP.290.121.ST.000	BSPS.10.304	BSPS.11.012
290 RL, rigid	SIR transparent	BSP.290.241.ST.000	BSPS.10.305	BSPS.11.012
320 RL, rigid	NBR black	BSP.320.111.ST.000	BSPS.10.309	BSPS.11.014
320 RL, rigid	NBR grey	BSP320.121.ST.000	BSPS.10.388	BSPS.11.014
320 RL, rigid	SIR transparent	BSP.320.241.ST.000	BSPS.10.488	BSPS.11.014
350 RL, rigid	NBR black	BSP.3500.111.ST.000	BSPS.10.343	BSPS.11.015
350 RL, rigid	NBR grey	BSP.350.121.ST.000	BSPS.10.344	BSPS.11.015
350 RL, rigid	SIR transparent	BSP.350.241.ST.000	BSPS.10.555	BSPS.11.015
400 RL, rigid	NBR black	BSP.400.111.ST.000	BSPS.10.341	BSPS.11.016
400 RL, rigid	NBR grey	BSP.400.121.ST.000	BSPS.10.342	BSPS.11.016
400 RL, rigid	SIR transparent	BSP.400.241.ST.000	BSPS.10.556	BSPS.11.016

Technical drawing

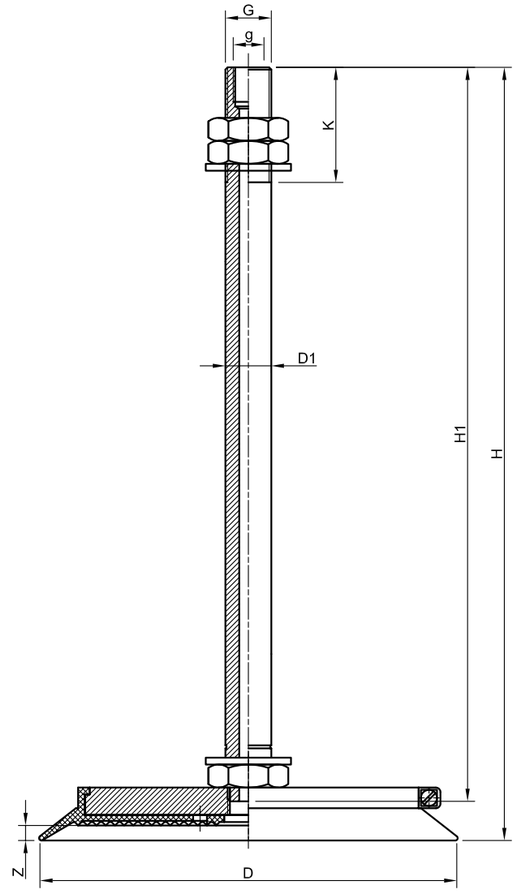

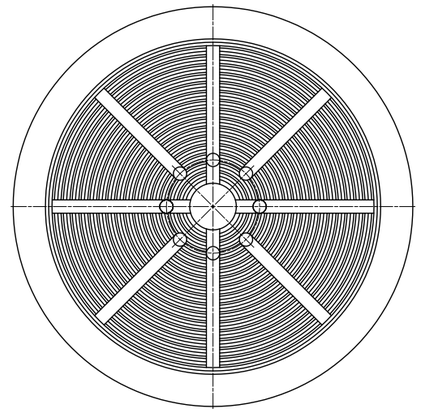

Example use



Technical data

Type	D	D1	G	g	H	H1	K	Z	Weight (kg)	Carrying capacity* (kg)	
										vertical	horizontal
120 RL, rigid	120	20	M 20	1/4“	276	249	25	6,0	0,820	29,00	58,00
180 RL, rigid	180	20	M 20	1/4“	276	249	25	6,5	1,220	65,00	130,00
200 RL, rigid	200	20	M 20	1/4“	276	249	25	10,5	1,340	77,00	155,00
230 RL, rigid	230	20	M 20	1/4“	276	249	25	6,5	1,620	116,00	232,00
270 RL, rigid	270	20	M 20	1/4“	276	249	25	5,0	2,320	162,00	324,00
290 RL, rigid	290	20	M 20	1/4“	281	249	25	10,5	2,470	162,00	324,00
320 RL, rigid	320	20	M 20	1/4“	282	249	25	10,5	3,020	223,00	447,00
350 RL, rigid	350	20	M 20	1/4“	282	249	25	10,5	3,470	230,00	461,00
400 RL, rigid	400	20	M 20	1/4“	282	249	25	10,5	4,420	311,00	622,00

*) see page 8

General information



- universally applicable suction plate for smooth and lightly structured surfaces
- Diameter: 120 mm to 400 mm
- medium-length sealing lip and groove rubber support
- replaceable seal (clamped with clamping clip)
- aluminium base plate with A-P suspension: 10° pivoting on all sides
- central vacuum feed through the suspension bolt
- suspension bolts available in various sizes

Order data

Type	Material	Article number		
		Suction plate	Replacement seal	Clamping clip
120 RL, A-P	NBR black	BSP.120.111.AP.000	BSPS.10.206	BSPS.11.001
120 RL, A-P	NBR grey	BSP.120.121.AP.000	BSPS.10.212	BSPS.11.001
120 RL, A-P	SIR transparent	BSP.120.241.AP.000	BSPS.10.292	BSPS.11.001
180 RL, A-P	NBR black	BSP.180.111.AP.000	BSPS.10.175	BSPS.11.002
180 RL, A-P	NBR grey	BSP.180.121.AP.000	BSPS.10.289	BSPS.11.002
180 RL, A-P	SIR transparent	BSP.180.241.AP.000	BSPS.10.293	BSPS.11.002
200 RL, A-P	NBR black	BSP.202.111.AP.000	BSPS.10.368	BSPS.11.010
200 RL, A-P	NBR grey	BSP.202.121.AP.000	BSPS.10.395	BSPS.11.010
200 RL, A-P	SIR transparent	BSP.202.241.AP.000	BSPS.10.607	BSPS.11.010
230 RL, A-P	NBR black	BSP.230.111.AP.000	BSPS.10.336	BSPS.11.011
230 RL, A-P	NBR grey	BSP.230.121.AP.000	BSPS.10.337	BSPS.11.011
230 RL, A-P	SIR transparent	BSP.230.241.AP.000	BSPS.10.338	BSPS.11.011
270 RL, A-P	NBR black	BSP.270.111.AP.000	BSPS.10.197	BSPS.11.003
270 RL, A-P	NBR grey	BSP.270.121.AP.000	BSPS.10.228	BSPS.11.003
270 RL, A-P	SIR transparent	BSP.270.241.AP.000	BSPS.10.198	BSPS.11.003
290 RL, A-P	NBR black	BSP.290.111.AP.000	BSPS.10.299	BSPS.11.012
290 RL, A-P	NBR grey	BSP.290.121.AP.000	BSPS.10.304	BSPS.11.012
290 RL, A-P	SIR transparent	BSP.290.241.AP.000	BSPS.10.305	BSPS.11.012
320 RL, A-P	NBR black	BSP.320.111.AP.000	BSPS.10.309	BSPS.11.014
320 RL, A-P	NBR grey	BSP.320.121.AP.000	BSPS.10.388	BSPS.11.014
320 RL, A-P	SIR transparent	BSP.320.241.AP.000	BSPS.10.488	BSPS.11.014
350 RL, A-P	NBR black	BSP.350.111.AP.000	BSPS.10.343	BSPS.11.015
350 RL, A-P	NBR grey	BSP.350.121.AP.000	BSPS.10.344	BSPS.11.015
350 RL, A-P	SIR transparent	BSP.350.241.AP.000	BSPS.10.555	BSPS.11.015
400 RL, A-P	NBR black	BSP.400.111.AP.000	BSPS.10.341	BSPS.11.016
400 RL, A-P	NBR grey	BSP.400.121.AP.000	BSPS.10.342	BSPS.11.016
400 RL, A-P	SIR transparent	BSP.400.241.AP.000	BSPS.10.556	BSPS.11.016

Technical drawing

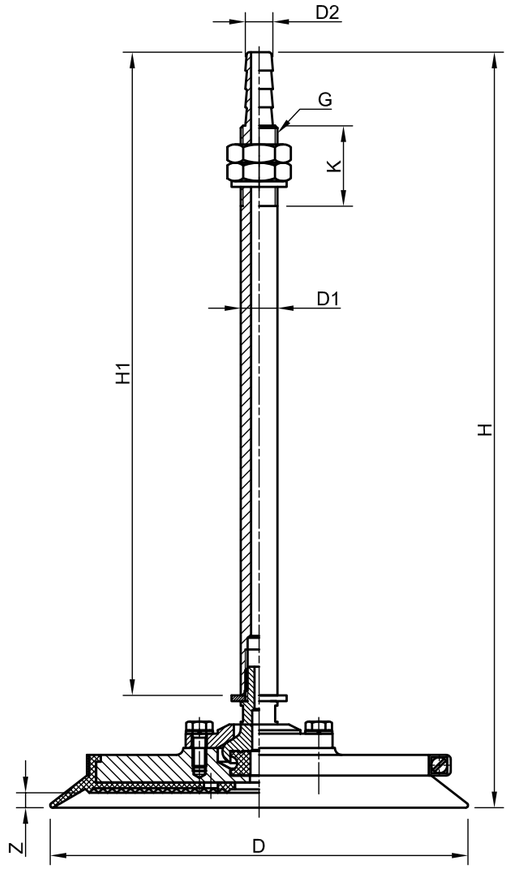

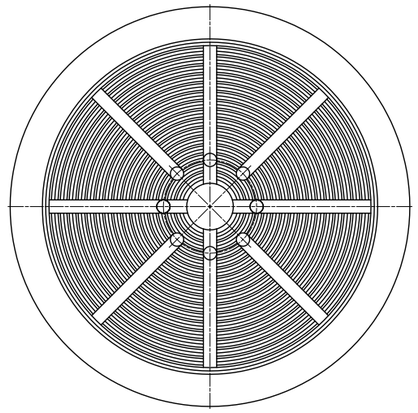

Example use



Technical data

Type	D	D1	D2	G	H	H1	K	Z	Weight (kg)	Carrying capacity* (kg)	
										vertical	horizontal
120 RL, A-P	120	16	12,00	M 16	330,0	280	34	6,0	0,736	29,00	58,00
180 RL, A-P	180	16	12,00	M 16	330,0	280	34	6,5	1,093	65,00	130,00
200 RL, A-P	200	16	12,00	M 16	335,0	280	34	10,5	1,193	77,00	155,00
230 RL, A-P	230	20	14,65	M 20	377,0	311	59	6,0	2,184	116,00	232,00
270 RL, A-P	270	20	14,65	M 20	377,0	311	59	5,0	2,745	162,00	324,00
290 RL, A-P	290	20	14,65	M 20	384,0	311	59	10,5	2,875	162,00	324,00
320 RL, A-P	320	20	14,65	M 20	369,5	311	59	10,5	2,975	223,00	447,00
350 RL, A-P	350	20	14,65	M 20	369,5	311	59	10,5	3,040	230,00	461,00
400 RL, A-P	400	20	14,65	M 20	369,5	311	59	10,5	4,200	311,00	622,00

*) see page 8

General information



- universally applicable suction plate for smooth and lightly structured surfaces
- Diameter: 120 mm to 400 mm
- medium-length sealing lip and groove rubber support
- replaceable seal (clamped with clamping clip)
- aluminium base plate with R-K suspension: 10° pivoting on all sides
- vacuum feed through the base plate
- suspension bolts available in various sizes

Order data

Type	Material	Article number		
		Suction plate	Replacement seal	Clamping clip
120 RL, R-K	NBR black	BSP.120.111.RK.000	BSPS.10.206	BSPS.11.001
120 RL, R-K	NBR grey	BSP.120.121.RK.000	BSPS.10.212	BSPS.11.001
120 RL, R-K	SIR transparent	BSP.120.241.RK.000	BSPS.10.292	BSPS.11.001
180 RL, R-K	NBR black	BSP.180.111.RK.000	BSPS.10.175	BSPS.11.002
180 RL, R-K	NBR grey	BSP.180.121.RK.000	BSPS.10.289	BSPS.11.002
180 RL, R-K	SIR transparent	BSP.180.241.RK.000	BSPS.10.293	BSPS.11.002
200 RL, R-K	NBR black	BSP.202.111.RK.000	BSPS.10.368	BSPS.11.010
200 RL, R-K	NBR grey	BSP.202.121.RK.000	BSPS.10.395	BSPS.11.010
200 RL, R-K	SIR transparent	BSP.202.241.RK.000	BSPS.10.607	BSPS.11.010
230 RL, R-K	NBR black	BSP.230.111.RK.000	BSPS.10.336	BSPS.11.011
230 RL, R-K	NBR grey	BSP.230.121.RK.000	BSPS.10.337	BSPS.11.011
230 RL, R-K	SIR transparent	BSP.230.241.RK.000	BSPS.10.338	BSPS.11.011
270 RL, R-K	NBR black	BSP.270.111.RK.000	BSPS.10.197	BSPS.11.003
270 RL, R-K	NBR grey	BSP.270.121.RK.000	BSPS.10.228	BSPS.11.003
270 RL, R-K	SIR transparent	BSP.270.241.RK.000	BSPS.10.198	BSPS.11.003
290 RL, R-K	NBR black	BSP.290.111.RK.000	BSPS.10.299	BSPS.11.012
290 RL, R-K	NBR grey	BSP.290.121.RK.000	BSPS.10.304	BSPS.11.012
290 RL, R-K	SIR transparent	BSP.290.241.RK.000	BSPS.10.305	BSPS.11.012
320 RL, R-K	NBR black	BSP.320.111.RK.000	BSPS.10.309	BSPS.11.014
320 RL, R-K	NBR grey	BSP.320.121.RK.000	BSPS.10.388	BSPS.11.014
320 RL, R-K	SIR transparent	BSP.320.241.RK.000	BSPS.10.488	BSPS.11.014
350 RL, R-K	NBR black	BSP.350.111.RK.000	BSPS.10.343	BSPS.11.015
350 RL, R-K	NBR grey	BSP.350.121.RK.000	BSPS.10.344	BSPS.11.015
350 RL, R-K	SIR transparent	BSP.350.241.RK.000	BSPS.10.555	BSPS.11.015
400 RL, R-K	NBR black	BSP.400.111.RK.000	BSPS.10.341	BSPS.11.016
400 RL, R-K	NBR grey	BSP.400.121.RK.000	BSPS.10.342	BSPS.11.016
400 RL, R-K	SIR transparent	BSP.400.241.RK.000	BSPS.10.556	BSPS.11.016

Technical drawing

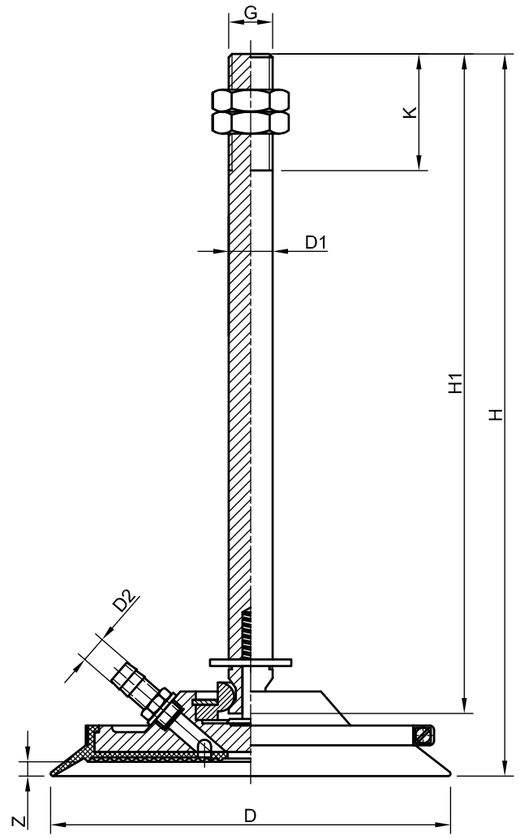

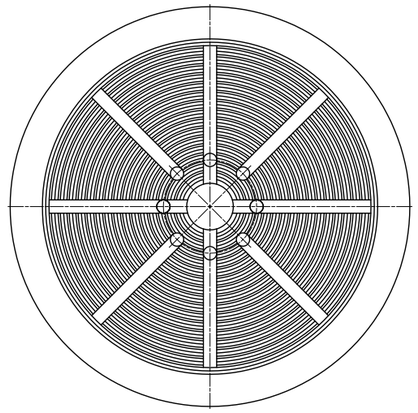

Example use

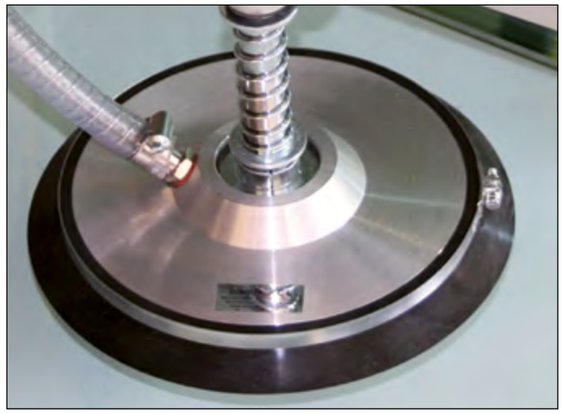

Technical data

Type	D	D1	D2	G	H	H1	K	Z	Weight (kg)	Carrying capacity* (kg)	
										vertical	horizontal
120 RL, R-K	120	20	12,0	M 20	330	300	53	6,0	0,736	29,00	58,00
180 RL, R-K	180	20	12,0	M 20	330	300	53	6,5	1,093	65,00	130,00
200 RL, R-K	200	20	12,0	M 20	333	300	53	10,5	1,193	77,00	155,00
230 RL, R-K	230	20	12,0	M 20	330	300	53	6,5	2,184	116,00	232,00
270 RL, R-K	270	20	12,0	M 20	330	300	53	5,0	2,745	162,00	324,00
290 RL, R-K	290	20	12,0	M 20	335	300	53	10,5	2,875	162,00	324,00
320 RL, R-K	320	20	14,5	M 20	336	300	53	10,5	2,975	223,00	447,00
350 RL, R-K	350	20	14,5	M 20	336	300	53	10,5	3,040	230,00	461,00
400 RL, R-K	400	20	17,5	M 20	336	300	53	10,5	4,200	311,00	622,00

*) see page 8

General information

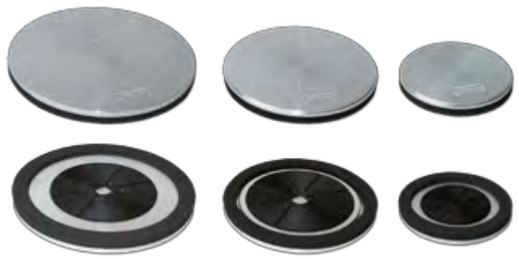

- suction plate for very coarse or structured surfaces
- Diameter: 142 mm to 344 mm
- cellular rubber sealing ring and inner groove rubber support
- seals bonded on the base plate
- aluminium base plate
- drilling template available on customer request

Example use



Technical drawing

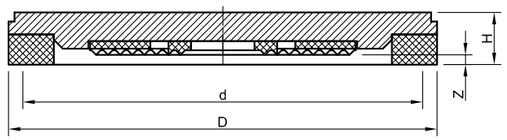

Technical data / Order data

Type	D	d	H	Z	Weight (kg)	Carrying capacity* (kg)	
						vertical	horizontal
BLSP 142 SCP	142	112	17,25	3,25	0,458	33,00	66,00
BLSP 192 SCP	192	152	17,25	3,25	0,858	59,00	119,00
BLSP 232 SCP	232	192	17,25	3,25	1,256	94,00	188,00
BLSP 344 SCP	344	304	17,25	3,25	2,848	230,00	461,00

*) see page 8

Type	Article number	
	Flat suction cup	Replacement seal
BLSP 142 SCP	BLSP.142.232.000	BSPS.10.449
BLSP 192 SCP	BLSP.192.232.000	BSPS.10.450
BLSP 232 SCP	BLSP.232.232.000	BSPS.10.453
BLSP 344 SCP	BLSP.344.232.000	BSPS.10.468

General information

- suction plate for very coarse or structured surfaces
- Diameter: 142 mm to 344 mm
- cellular rubber sealing ring and inner groove rubber support
- seals bonded on the base plate
- aluminium base plate with rigid suspension
- central vacuum feed through the suspension bolt
- suspension bolts available in various sizes



Technical drawing

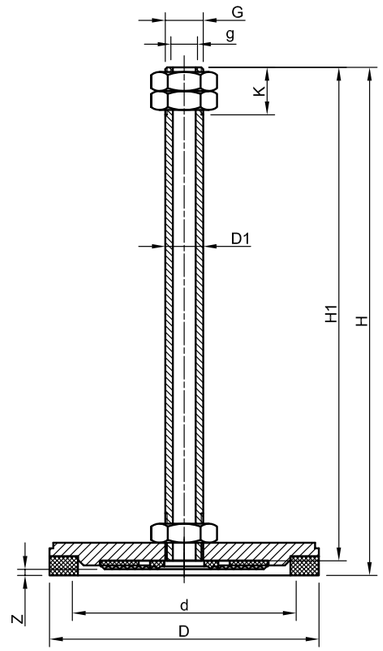

Example use



Order data

Type	Article number	
	Suction plate	Replacement seal
142 SCP, rigid	BSP.142.232.ST.000	BSPS.10.449
192 SCP, rigid	BSP.192.232.ST.000	BSPS.10.450
232 SCP, rigid	BSP.232.232.ST.000	BSPS.10.453

Technical data

Type	D	D1	d	G	g	H	H1	K	Z	Weight (kg)	Carrying capacity* (kg)	
											vertical	horizontal
142 SCP, rigid	142	20	112	M 20	1/4"	266	249	25	1,75	1,028	33,00	66,00
192 SCP, rigid	192	20	152	M 20	1/4"	266	249	25	1,75	1,424	59,00	119,00
232 SCP, rigid	232	20	192	M 20	1/4"	266	249	25	1,75	1,824	94,00	188,00

*) see page 8

General information



- suction plate for very coarse or structured surfaces
- Diameter: 142 mm, 192 mm and 232 mm
- cellular rubber sealing ring and inner groove rubber support
- seals bonded on the base plate
- aluminium base plate with A-P suspension: 10° pivoting on all sides
- central vacuum feed through the suspension bolt
- suspension bolts available in various sizes

Technical drawing

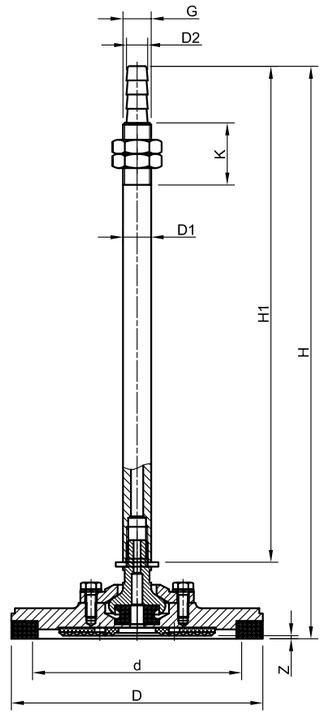

Order data

Type	Article number	
	Suction plate	Replacement seal
142 SCP, A-P	BSP.142.232.AP.000	BSPS.10.449.01
192 SCP, A-P	BSP.192.232.AP.000	BSPS.10.450.03
232 SCP, A-P	BSP.232.232.AP.000	BSPS.10.453.01

Technical data

Type	D	D1	D2	d	G	H	H1	K	Z	Weight (kg)	Carrying capacity* (kg)	
											vertical	horizontal
142 SCP, A-P	142	16	12,0	112	M 16	323	280	34	1,75	0,904	33,00	66,00
192 SCP, A-P	192	16	12,0	152	M 16	323	280	34	1,75	1,324	59,00	119,00
232 SCP, A-P	232	20	14,5	192	M 20	360	300	59	1,75	2,268	94,00	188,00

*) see page 8

General information

- suction plate for very coarse or structured surfaces
- Diameter: 142 mm, 192 mm and 232 mm
- cellular rubber sealing ring and inner groove rubber support
- seals bonded on the base plate
- aluminium base plate with R-K suspension: 10° pivoting on all sides
- vacuum feed through the base plate
- suspension bolts available in various sizes



Technical drawing

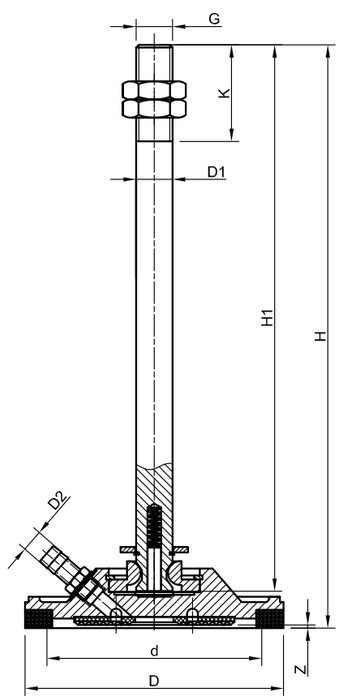

Order data

Type	Article number	
	Suction plate	Replacement seal
142 SCP, A-P	BSP.142.232.RK.000	BSPS.10.449
192 SCP, A-P	BSP.192.232.RK.000	BSPS.10.450
232 SCP, A-P	BSP.232.232.RK.000	BSPS.10.453.01

Technical data

Type	D	D1	D2	d	G	H	H1	K	Z	Weight (kg)	Carrying capacity* (kg)	
											vertical	horizontal
142 SCP, R-K	142	88	20	112	M 20	320	300	53	1,75	1,493	33,00	66,00
192 SCP, R-K	192	136	20	152	M 20	320	300	53	1,75	1,944	59,00	119,00
232 SCP, R-K	232	136	20	192	M 20	320	300	53	1,75	2,338	94,00	188,00

*) see page 8

General information



- robust suction plate for smooth and lightly structured surfaces
- Diameter: 160 mm and 220 mm
- long sealing lip
- seal with vulcanised steel ring
- aluminium base plate with A-P suspension: 10° pivoting on all sides
- central vacuum feed through the suspension bolt
- suspension bolts available in various sizes

Product image



Order data

Type	Material	Article number	
		Suction plate	Replacement seal
160 L, A-P	NBR black	BSP.164.111.AP.000	BSPS.10.116
160 L, A-P	NBR grey	BSP.164.121.AP.000	BSPS.10.246
160 L, A-P	SIR transparent	BSP.164.241.AP.000	BSPS.10.117
220 L, A-P	NBR black	BSP.220.111.AP.000	BSPS.10.278
220 L, A-P	NBR grey	BSP.220.121.AP.000	BSPS.10.279
220 L, A-P	SIR transparent	BSP.220.241.AP.000	BSPS.10.280

Technical drawing

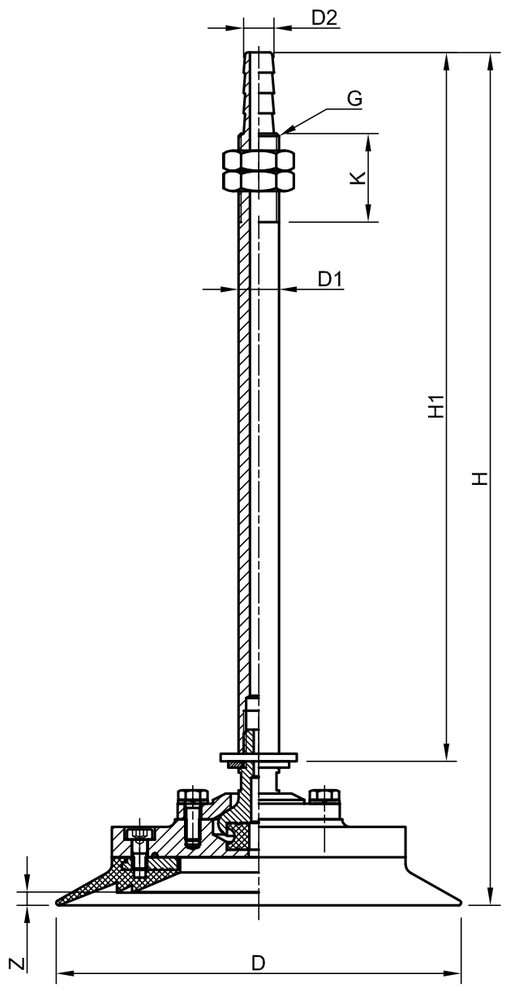

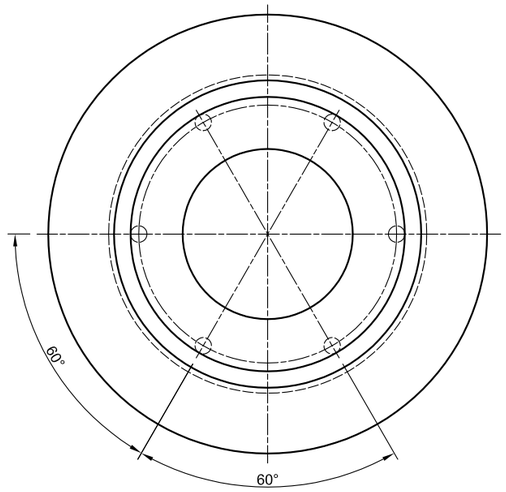

Technical data

Type	D	D1	D2	G	H	H1	K	Z	Weight (kg)	Carrying capacity* (kg)	
										vertical	horizontal
160 L, A-P	160	16	12,00	M 16	337,0	280	34	5,25	1,104	52,00	105,00
220 L, A-P	220	20	14,65	M 20	387,5	311	59	5,00	2,530	96,00	192,00

*) see page 8

General information



- robust suction plate for smooth and lightly structured surfaces
- Diameter: 160 mm and 220 mm
- long sealing lip
- seal with vulcanised steel ring
- aluminium base plate with R-K suspension: 10° pivoting on all sides
- vacuum feed through the base plate
- suspension bolts available in various sizes

Example use



Order data

Type	Material	Article number	
		Suction plate	Replacement seal
160 L, R-K	NBR black	BSP.164.111.RK.000	BSPS.10.116
160 L, R-K	NBR grey	BSP.164.121.RK.000	BSPS.10.246
160 L, R-K	SIR transparent	BSP.164.241.RK.000	BSPS.10.117
220 L, R-K	NBR black	BSP.220.111.RK.000	BSPS.10.278
220 L, R-K	NBR grey	BSP.220.121.RK.000	BSPS.10.279
220 L, R-K	SIR transparent	BSP.220.241.RK.000	BSPS.10.280

Technical drawing

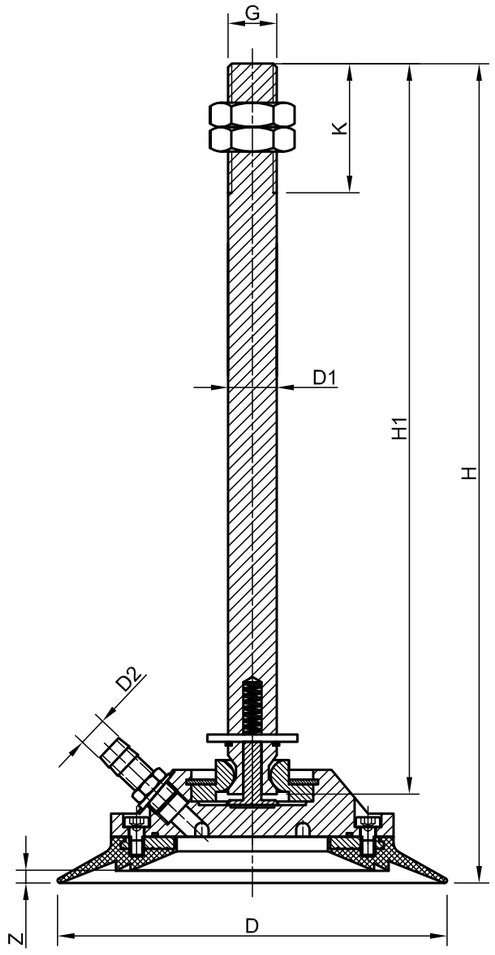

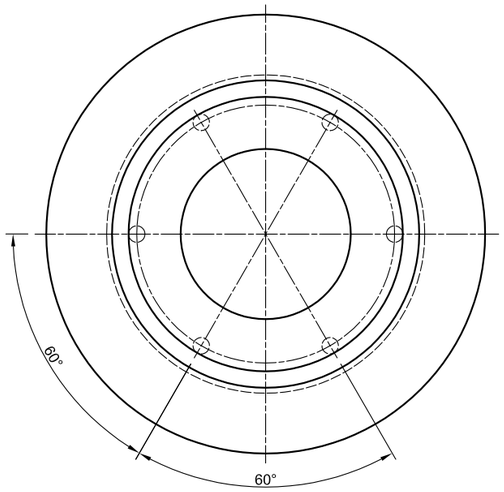

Technical data

Type	D	D1	D2	G	H	H1	K	Z	Weight (kg)	Carrying capacity* (kg)	
										vertical	horizontal
160 L, R-K	160	20	12	M 20	336	300	53	5,25	1,660	52,00	105,00
220 L, R-K	220	20	12	M 20	338	300	53	5,00	2,550	96,00	192,00

*) see page 8

Type BSP 140 D, A-P

General information



- suction plate for structured surfaces
- Diameter: 140 mm
- short sealing edge and inner support strip
- replaceable seal (clamped with clamping clip)
- aluminium base plate with A-P suspension: 10° pivoting on all sides
- central vacuum feed through the suspension bolt
- suspension bolts available in various sizes

Technical drawing

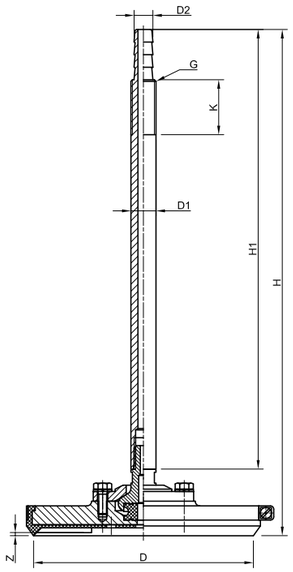



Technical data / Order data

Type	D	D1	D2	G	H	H1	K	Z	Weight (kg)	Carrying capacity* (kg)	
										vertical	horizontal
140 D, A-P	140	16	12	M 16	322	280	34	2	1,625	45,00	91,00

*) see page 8

Type	Material	Article number		
		Suction plate	Replacement seal	Clamping clip
140 D, A-P	NBR black	BSP.140.111.AP.000	BSPS.10.160	BSPS.11.002
140 D, A-P	NBR grey	BSP.140.121.AP.000	BSPS.10.130	BSPS.11.002
140 D, A-P	SIR transparent	BSP.140.241.AP.000	BSPS.10.161	BSPS.11.002

Type BSP 140 D, R-K

General information

- suction plate for structured surfaces
- Diameter: 140 mm
- short sealing edge and inner support strip
- replaceable seal (clamped with clamping clip)
- aluminium base plate with R-K suspension: 10° pivoting on all sides
- vacuum feed through the base plate
- suspension bolts available in various sizes



Technical drawing

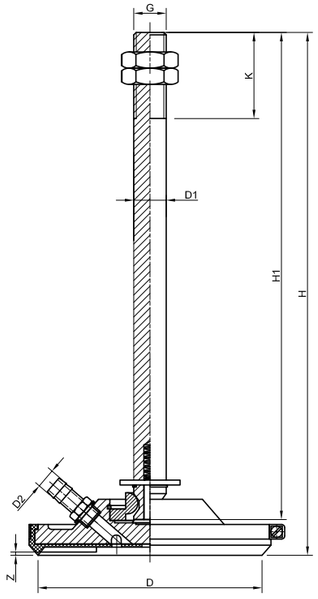

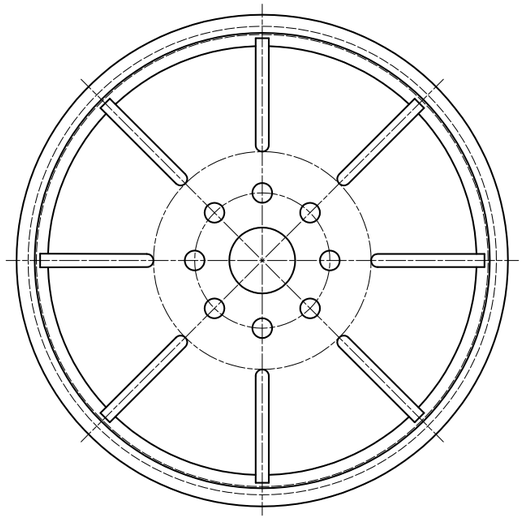

Technical data / Order data

Type	D	D1	D2	G	H	H1	K	Z	Weight (kg)	Carrying capacity* (kg)	
										vertical	horizontal
140 D, A-P	140	20	12	M 20	322	300	53	2	1,625	45,00	91,00

*) see page 8

Type	Material	Article number		
		Suction plate	Replacement seal	Clamping clip
140 D, A-P	NBR black	BSP.140.111.RK.000	BSPS.10.160	BSPS.11.002
140 D, A-P	NBR grey	BSP.140.121.RK.000	BSPS.10.130	BSPS.11.002
140 D, A-P	SIR transparent	BSP.140.241.RK.000	BSPS.10.161	BSPS.11.002

Type BSP 180 L, A-P

General information



- universally applicable suction plate for coarse surfaces
- Diameter: 180 mm
- medium-length sealing lip
- replaceable seal (clamped with clamping clip)
- aluminium base plate with A-P suspension:
  10° pivoting on all sides
- central vacuum feed through the suspension bolt
- suspension bolts available in various sizes

Example use



Technical drawing

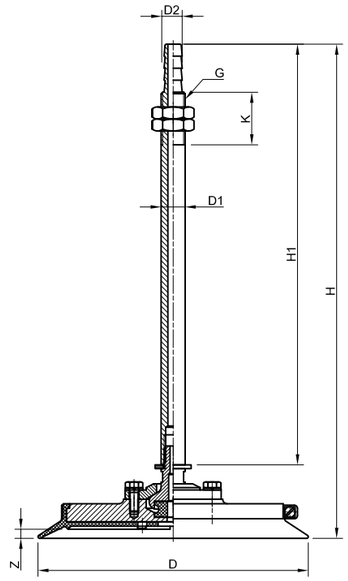

Technical data / Order data

Type	D	D1	D2	G	H	H1	K	Z	Weight (kg)	Carrying capacity* (kg)	
										vertical	horizontal
180 L, A-P	180	16	12	M 16	329	280	34	6	1,360	69,00	138,00

*) see page 8

Type	Material	Article number		
		Suction plate	Replacement seal	Clamping clip
180 L, A-P	NBR black	BSP.182.111.AP.000	BSPS.10.017	BSPS.11.002
180 L, A-P	NBR grey	BSP.182.121.AP.000	BSPS.10.018	BSPS.11.002
180 L, A-P	SIR transparent	BSP.182.241.AP.000	BSPS.10.019	BSPS.11.002

Type BSP 180 L, R-K

General information

- universally applicable suction plate for coarse surfaces
- Diameter: 180 mm
- medium-length sealing lip
- replaceable seal (clamped with clamping clip)
- aluminium base plate with R-K suspension:
  10° pivoting on all sides
- vacuum feed through the base plate
- suspension bolts available in various sizes



Technical drawing

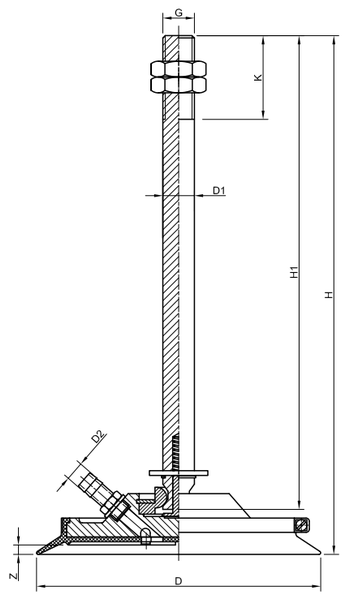

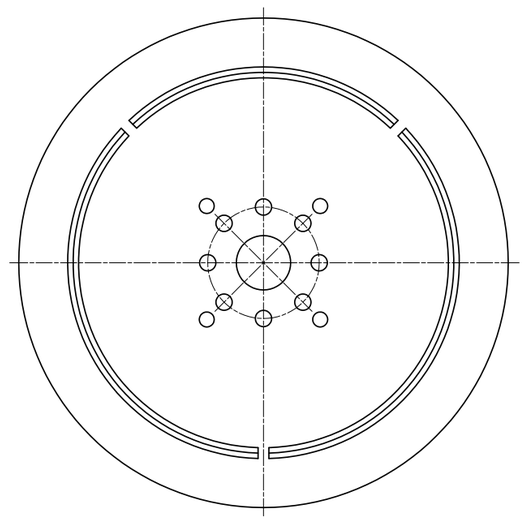

Technical data / Order data

Type	D	D1	D2	G	H	H1	K	Z	Weight (kg)	Carrying capacity* (kg)	
										vertical	horizontal
180 L, R-K	180	20	12	M 20	329	300	53	6	1,645	69,00	138,00

*) see page 8

Type	Material	Article number		
		Suction plate	Replacement seal	Clamping clip
180 L, R-K	NBR black	BSP.182.111.RK.000	BSPS.10.017	BSPS.11.002
180 L, R-K	NBR grey	BSP.182.121.RK.000	BSPS.10.018	BSPS.11.002
180 L, R-K	SIR transparent	BSP.182.241.RK.000	BSPS.10.019	BSPS.11.002

Type BLSP 180 L

General information



- universally applicable suction plate for coarse and lightly structured surfaces
- Diameter: 180 mm
- medium-length sealing lip
- replaceable seal (clamped with clamping clip)
- aluminium base plate
- drilling template available on customer request

Example use



Technical drawing

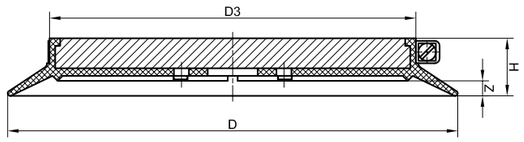

Technical data / Order data

Type	D	D3	H	Z	Weight (kg)	Carrying capacity* (kg)	
						vertical	horizontal
BLSP 180 L	180	146,5	23	6	0,640	69,00	138,00

*) see page 8

Type	Material	Article number		
		Flat suction cup	Replacement seal	Clamping clip
BLSP 180 L	NBR black	BLSP.182.111.000	BSPS.10.017	BSPS.11.002
BLSP 180 L	NBR grey	BLSP.182.121.000	BSPS.10.018	BSPS.11.002
BLSP 180 L	SIR transparent	BLSP.182.241.000	BSPS.10.019	BSPS.11.002

Type BLSP 200 PK

General information

- suction plate for coarse and structured surfaces
- Diameter: 200 mm
- long sealing lip, groove rubber support and additional sealing lip
- replaceable seal (clamped with clamping clip)
- aluminium base plate
- drilling template available on customer request



Technical drawing

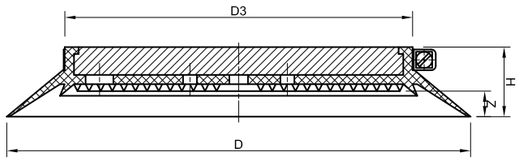

Example use



Technical data / Order data

Type	D	D3	H	Z	Weight (kg)	Carrying capacity* (kg)	
						vertical	horizontal
BLSP 200 PK	200	150	30	9	0,770	77,00	155,00

*) see page 8

Type	Material	Article number		
		Flat suction cup	Replacement seal	Clamping clip
BLSP 200 PK	NBR black	BLSP.200.111.000	BSPS.10.207	BSPS.11.010
BLSP 200 PK	NBR grey	BLSP.200.121.000	BSPS.10.213	BSPS.11.010
BLSP 200 PK	NBR white	BLSP.200.122.000	BSPS.10.427	BSPS.11.010
BLSP 200 PK	NR brown	BLSP.200.123.000	BSPS.10.428	BSPS.11.010
BLSP 200 PK	SIR transparent	BLSP.200.241.000	BSPS.10.295	BSPS.11.010

Type BSP 200 PK, A-P

General information



- suction plate for coarse and structured surfaces
- Diameter: 200 mm
- long sealing lip, groove rubber support and additional sealing lip
- replaceable seal (clamped with clamping clip)
- aluminium base plate with A-P suspension: 10° pivoting on all sides
- central vacuum feed through the suspension bolt

Technical drawing

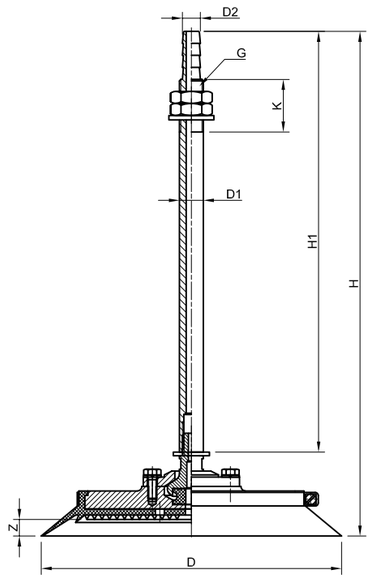



Technical data / Order data

Type	D	D1	D2	G	H	H1	K	Z	Weight (kg)	Carrying capacity* (kg)	
										vertical	horizontal
200 PK, A-P	200	16	12	M 16	336	280	34	11	1,170	77,00	155,00

*) see page 8

Type	Material	Article number		
		Suction plate	Replacement seal	Clamping clip
200 PK, A-P	NBR black	BSP.200.111.AP.000	BSPS.10.207	BSPS.11.010
200 PK, A-P	NBR grey	BSP.200.121.AP.000	BSPS.10.213	BSPS.11.010
200 PK, A-P	SIR transparent	BSP.200.241.AP.000	BSPS.10.295	BSPS.11.010

Type BSP 200 PK, R-K

General information

- suction plate for coarse and structured surfaces
- Diameter: 200 mm
- long sealing lip, groove rubber support and additional sealing lip
- replaceable seal (clamped with clamping clip)
- aluminium base plate with R-K suspension: 10° pivoting on all sides
- vacuum feed through the base plate
- suspension bolts available in various sizes



Technical drawing

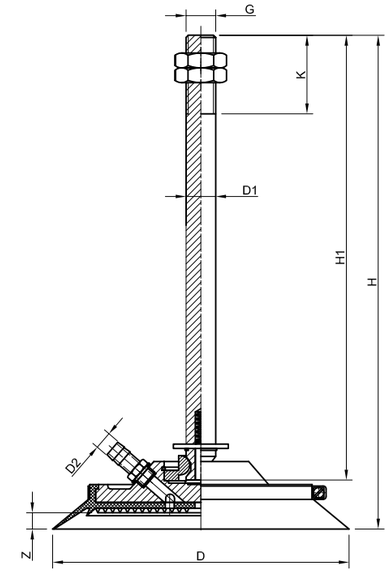

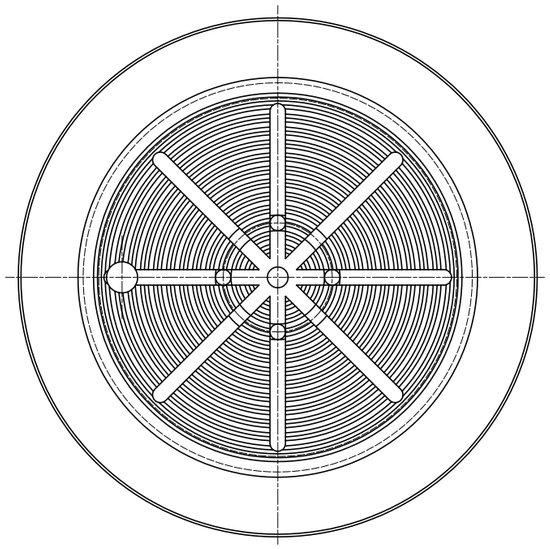

Technical data / Order data

Type	D	D1	D2	G	H	H1	K	Z	Weight (kg)	Carrying capacity* (kg)	
										vertical	horizontal
200 PK, R-K	200	20	12	M 20	333	300	53	11	1,740	77,00	155,00

*) see page 8

Type	Material	Article number		
		Suction plate	Replacement seal	Clamping clip
200 PK, R-K	NBR black	BSP.200.111.RK.000	BSPS.10.207	BSPS.11.010
200 PK, R-K	NBR grey	BSP.200.121.RK.000	BSPS.10.213	BSPS.11.010
200 PK, R-K	SIR transparent	BSP.200.241.RK.000	BSPS.10.295	BSPS.11.010

General information

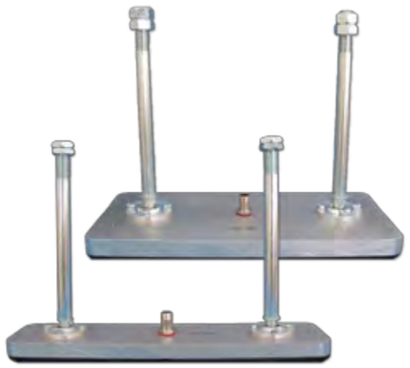

- square suction plate for coarse surfaces
- Dimensions: 100x450 mm, 150x450mm, 200x450 mm, 250x450 mm
- foam rubber seal
- aluminium base plate with A-P suspension: 10° pivoting on all sides
- vacuum feed through the base plate
- suspension bolts available in various sizes
- appropriate cellular rubber seals on page 133

Technical drawing

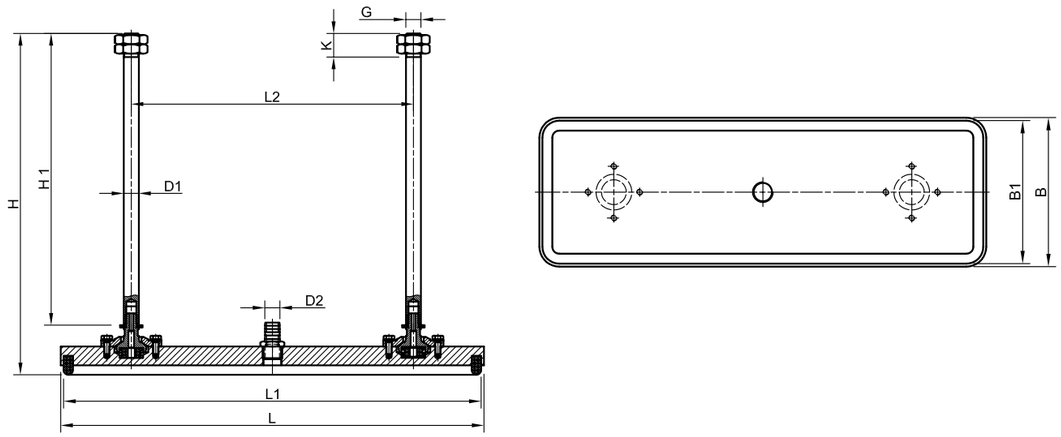

Technical data / Order data

Type	B	B1	D1	D2	G	H	H1	L	L1	L2	K	Weight (kg)	Carrying capacity* (kg)	
													vertical	horizontal
BSPM 100x450	100	94	16	16	M 16	363	310	450	444	300	25	3,800	95,00	191,00
BSPM 150x450	150	144	16	16	M 16	363	310	450	444	300	25	5,800	160,00	320,00
BSPM 200x450	200	194	20	16	M 20	367	300	450	444	300	65	7,800	225,00	450,00
BSPM 250x450	250	244	20	16	M 20	367	300	450	444	300	65	9,700	283,00	567,00

*) see page 8

Type	Article number	
	Suction plate	Replacement seal
BSPM 100x450	BSPM.100.450.AP.000	OSRS.001
BSPM 150x450	BSPM.150.450.AP.000	OSRS.001
BSPM 200x450	BSPM.200.450.AP.000	OSRS.001
BSPM 250x450	BSPM.250.450.AP.000	OSRS.001

General information

- suction plate for coarse and structured surfaces
- Diameter: 250 mm
- long sealing lip
- replaceable seal (clamped with clamping clip)
- aluminium base plate with R-K suspension: 10° pivoting on all sides
- vacuum feed through the base plate
- suspension bolts available in various sizes



Technical drawing

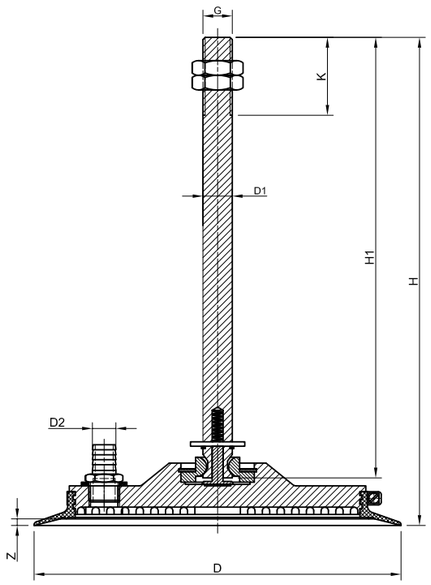

Example use



Technical data / Order data

Type	D	D1	D2	G	H	K	H1	K	L	Z	Weight (kg)	Carrying capacity* (kg)	
												vertical	horizontal
250 L, R-K	250	20	16	M 20	333	53	300	53	77	4,5	2,650	138,00	276,00

*) see page 8

Type	Material	Article number		
		Suction plate	Replacement seal	Clamping clip
250 L, R-K	NBR black	BSP.251.111.RK.000	BSPS.10.259	BSPS.11.004
250 L, R-K	NBR grey	BSP.251.121.RK.000	BSPS.10.093	BSPS.11.004
250 L, R-K	SIR transparent	BSP.251.241.RK.000	BSPS.10.094	BSPS.11.004

Type BSP 180 L, V+D, A-P

General information



- suction plate with separating function for porous surfaces (e.g. chipboard, MDF and OSB panels)
- Diameter: 180 mm
- long sealing lip and inner chamber seal
- replaceable seal (clamped with clamping clip)
- aluminium base plate with A-P suspension: 10° pivoting on all sides
- central compressed air feed through the suspension bolt
- vacuum feed through the base plate
- suspension bolts available in various sizes

Example use



Technical drawing

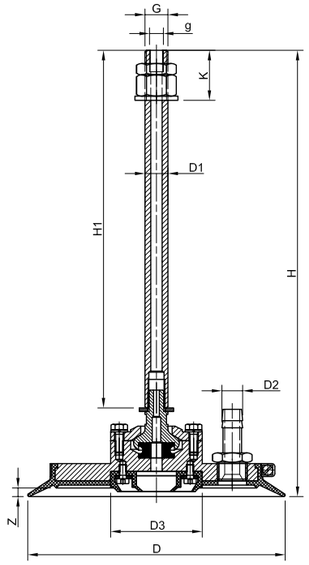

Technical data / Order data

Type	D	D1	D2	D3	G	g	H	H1	K	Z	Weight (kg)	Carrying capacity* (kg)	
												vertical	horizontal
180 L, V+D	180	16	14,5	64	M 16	1/8“	312	250	35	6	1,995	56,00	112,00

*) see page 8

Type	Material	Article number			
		Suction plate	Replacement seal	Inner seal	Clamping clip
180 L, V+D	NBR grey	BSP.183.121.AP.000	BSPS.10.018.04	BSPS.10.111	BSPS.11.002
180 L, V+D	SIR transparent	BSP.183.241.AP.000	BSPS.10.114.01	BSPS.10.171	BSPS.11.002

Type BSP 250 L, V+D, R-K

General information

- suction plate with separating function for porous surfaces (e.g. chipboard, MDF and OSB panels)
- Diameter: 250 mm
- long sealing lip and inner chamber seal
- replaceable seal (clamped with clamping clip)
- aluminium base plate with R-K suspension: 10° pivoting on all sides
- vacuum and compressed air feed through the base plate
- suspension bolts available in various sizes



Technical drawing

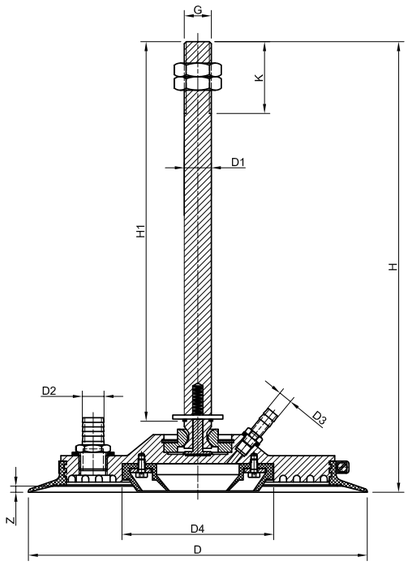

Example use



Technical data / Order data

Type	D	D1	D2	D3	D4	G	H	H1	K	Z	Weight (kg)	Carrying capacity* (kg)	
												vertical	horizontal
250 L,V+D	250	20	16	10	111	M 20	332	300	53	4,5	2,655	99,00	199,00

*) see page 8

Type	Material	Article number			
		Suction plate	Replacement seal	Inner seal	Clamping clip
250 L, V+D	NBR grey	BSP.253.121.RK.000	BSPS.10.093	BSPS.10.030	BSPS.11.004
250 L, V+D	SIR transparent	BSP.253.241.RK.000	BSPS.10.094	BSPS.10.031	BSPS.11.004

General information



- suction plate for smooth surfaces
- Diameter: 130 mm and 200 mm
- sealing lip and inner support strip
- replaceable seal (held on the base plate by internal stress)
- aluminium base plate with A-P suspension
- central vacuum feed through the suspension bolt
- suspension bolts available in various sizes

Technical drawing

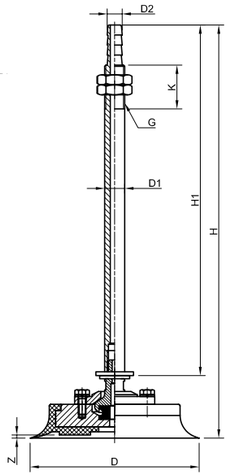



Technical data / Order data

Type	D	D1	D2	G	H	H1	K	Z	Weight (kg)	Carrying capacity* (kg)	
										vertical	horizontal
130 VS	135	16	12,0	M 16	330	280	34	2,5	0,841	37,00	75,00
200 VS	200	20	14,5	M 20	377	311	59	2,5	2,069	82,00	164,00

*) see page 8

Type	Material	Article number		
		Suction plate	Replacement seal	Clamping clip
130 VS	NBR black	BSP.130.111.AP.000	BSPS.10.327	BSPS.11.002
130 VS	NBR grey	BSP.130.121.AP.000	BSPS.10.199	BSPS.11.002
130 VS	NBR white	BSP.130.122.AP.000	BSPS.10.104	BSPS.11.002
200 VS	NBR black	BSP.203.111.AP.000	BSPS.10.223	BSPS.11.019
200 VS	NBR grey	BSP.203.121.AP.000	BSPS.10.216	BSPS.11.019
200 VS	NBR white	BSP.203.122.AP.000	BSPS.10.328	BSPS.11.019

General information

- suction plate for smooth surfaces
- Diameter: 130 mm and 200 mm
- sealing lip and burled rubber support
- replaceable seal (held on the base plate by internal stress)
- aluminium base plate with A-P suspension
- central vacuum feed through the suspension bolt
- suspension bolts available in various sizes



Technical drawing

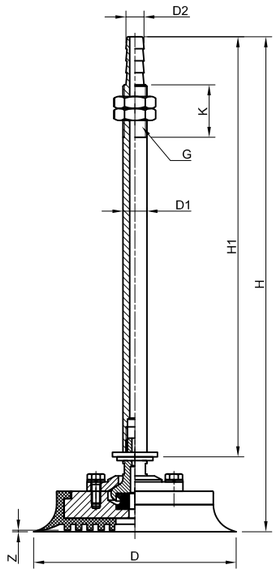

Example use

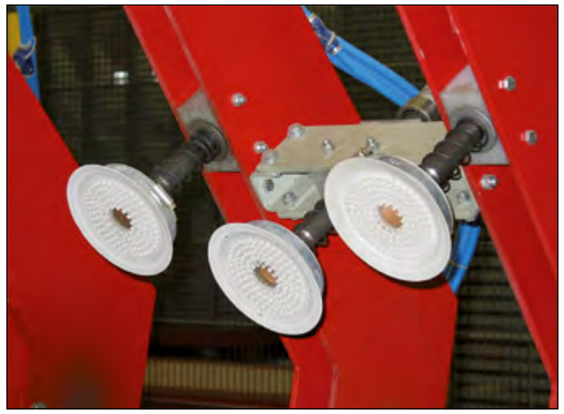

Technical data / Order data

Type	D	D1	D2	G	H	H1	K	Z	Weight (kg)	Carrying capacity* (kg)	
										vertical	horizontal
130 VS-NO	135	16	12,0	M 16	330	280	34	1	0,841	37,00	75,00
200 VS-NO	200	20	14,5	M 20	377	311	59	4	2,069	83,00	166,00

*) see page 8

Type	Material	Article number		
		Suction plate	Replacement seal	Clamping clip
130 VS-NO	NBR white	BSP.131.122.AP.000	BSPS.10.255	-
130 VS-NO	SIR transparent	BSP.131.241.AP.000	BSPS.10.307	-
200 VS-NO	NBR white	BSP.204.122.AP.000	BSPS.10.281	BSPS.11.019
200 VS-NO	SIR transparent	BSP.204.241.AP.000	BSPS.10.619	BSPS.11.019

General information



- suction plate for smooth surfaces and for use in fast-cycling systems
- Diameter: 70 mm, 100 mm and 200 mm
- medium-length sealing lip
- replaceable seal (held on the base plate by internal stress)
- aluminium base plate
- central vacuum feed through the suspension bolt
- with plastic pin valve: vacuum release with placement on the workpiece

Example use



Technical drawing

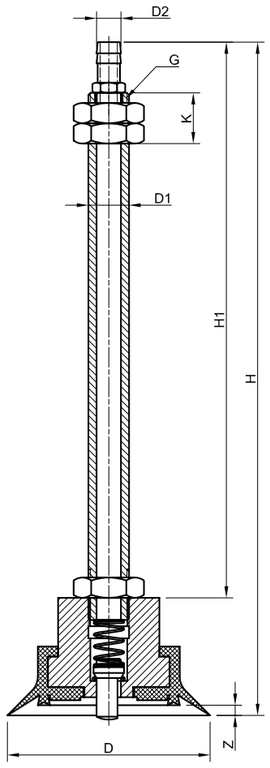

Technical data / Order data

Type	Material	Article number	
		Suction plate	Replacement seal
70 PV	NBR black	BSP.070.111.PV.000	BSPS.10.499
70 PV	NBR grey	BSP.070.121.PV.000	BSPS.10.106
70 PV	SIR transparent	BSP.070.241.PV.000	BSPS.10.354
100 PV	NBR black	BSP.100.111.PV.000	BSPS.10.599
100 PV	NBR grey	BSP.100.121.PV.000	BSPS.10.105
100 PV	SIR transparent	BSP.100.241.PV.000	BSPS.10.554
200 PV	NBR grey	BSP.201.121.PV.000	BSPS.10.128
200 PV	SIR transparent	BSP.201.241.PV.000	BSPS.10.147

Type	D	D1	D2	G	H	H1	K	Z	Weight (kg)	Carrying capacity* (kg)	
										vertical	horizontal
70 PV	70	20	12	M20x1,5	318	270	25	3,0	0,338	10,00	20,00
100 PV	100	20	12	M20x1,5	332	274	25	5,0	0,866	19,00	38,00
200 PV	200	20	12	M20x1,5	387	310	25	5,0	1,055	86,00	173,00

*) see page 8

General information

- compact suction plate seal for structured surfaces
- Diameter: 90 mm and 140 mm
- short sealing edge and inner support strip
- replaceable seal (held on the base plate by internal stress)
- aluminium base plate
- drilling template available on customer request



Technical drawing

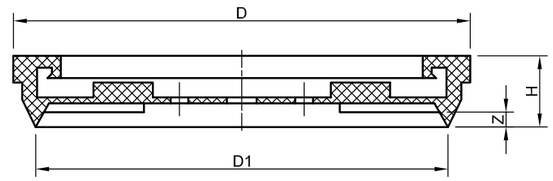

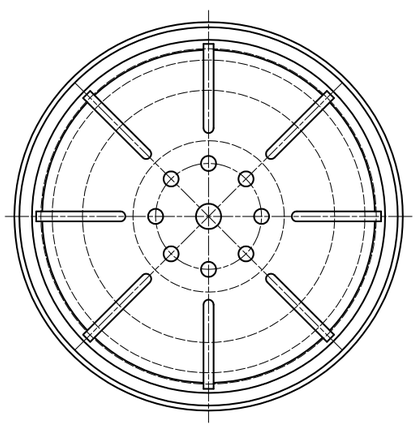

Technical data / Order data

Type	D	D1	H	Z	Weight (kg)	Carrying capacity* (kg)	
						vertical	horizontal
BLSP 90 D	90	98	24	4	0,242	19,00	38,00
BLSP 140 D	139	154	24	5	0,637	46,00	92,00

*) see page 8

Type	Material	Article number	
		Suction plate	Replacement seal
BLSP 90 D	NBR grey	BLSP.090.121.000	BSPS.10.661
BLSP 90 D	SIR transparent	BLSP.090.241.000	BSPS.10.675
BLSP 140 D	NBR grey	BLSP.140.121.000	BSPS.10.400
BLSP 140 D	SIR transparent	BLSP.140.241.000	BSPS.10.387

Type BSP 200 x 350, A-P - Pressmaster

General information



- suction plate for applications in the chipboard industry
- Dimensions: 200 x 350 mm
- silicone seal with small inner distribution grooves
- replaceable seal (bonded on the base plate)
- aluminium base plate with A-P suspension:
  10° pivoting on all sides
- vacuum feed possible through the base plate or suspension bolt
- suspension bolts available in various sizes

Example use

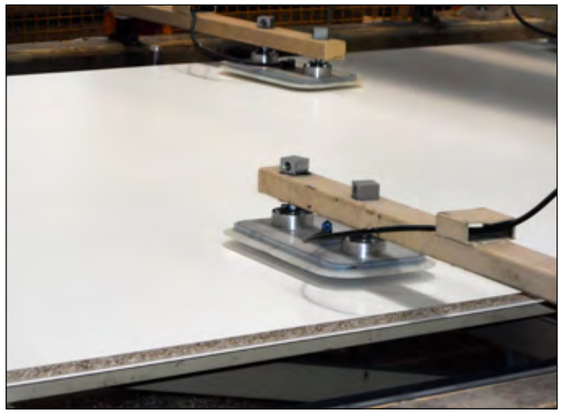

Technical drawing

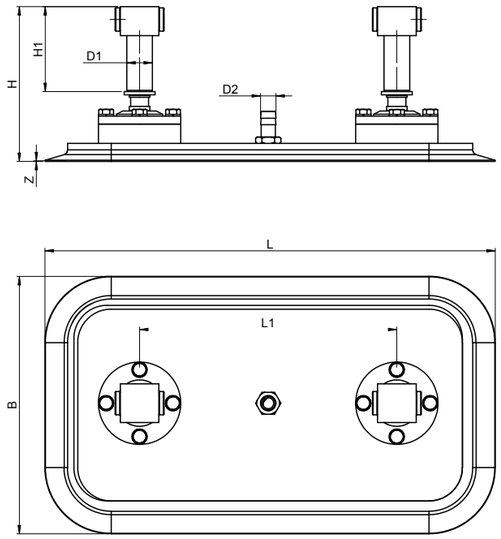

Technical data / Order data

Type	B	D1	D2	H	H1	L	L1	Z	Weight (kg)	Carrying capacity* (kg)	
										vertical	horizontal
200 x 350, A-P	200	20	12	120	66	350	200	1	2,670	158,00	356,00

*) see page 8

Type	Material	Article number	
		Suction plate	Replacement seal
200 x 350, A-P	SIR transparent	BSP.200.350.241.A.00	BSPS.10.204

Type BSP 200 x 350, R-K - Pressmaster

General information

- suction plate for applications in the chipboard industry
- Dimensions: 200 x 350 mm
- silicone seal with small inner distribution grooves
- replaceable seal (bonded on the base plate)
- aluminium base plate with R-K suspension:
  10° pivoting on all sides
- vacuum feed through the base plate
- suspension bolts available in various sizes



Technical drawing

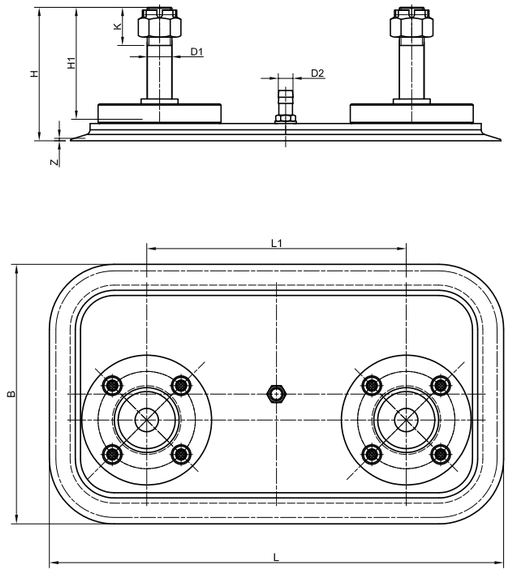

Example use



Technical data / Order data

Type	B	D1	D2	H	H1	K	L	L1	Z	Weight (kg)	Carrying capacity* (kg)	
											vertical	horizontal
200 x 350, R-K	200	20	12	111	81	31	350	200	1	2,400	158,00	356,00

*) see page 8

Type	Material	Article number	
		Suction plate	Replacement seal
200 x 350, R-K	SIR transparent	BSP.200.350.241.R.02	BSPS.10.204

Type BSP 160 R, rigid - Pressmaster

General information



- suction plate for applications in the chipboard industry
- Diameter: 160 mm
- silicone seal with groove rubber support
- replaceable seal (held on the base plate by internal stress)
- aluminium base plate with rigid suspension
- central vacuum feed through the suspension bolt
- suspension bolts available in various sizes
- other seal versions available

Example use

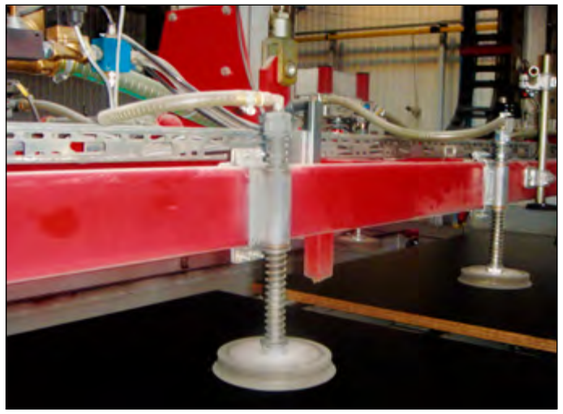

Technical drawing

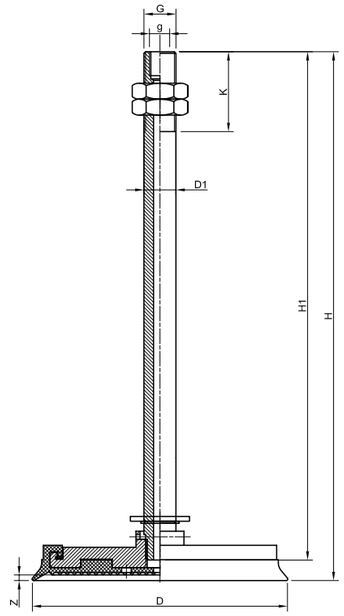

Technical data / Order data

Type	D	D1	D2	G	g	H	H1	K	Z	Weight (kg)	Carrying capacity* (kg)	
											vertical	horizontal
160 R, rigid	160	20	14,5	M 20		360	290	50	3,5	1,306	48,00	96,00

*) see page 8

Type	Material	Article number	
		Suction plate	Replacement seal
160 R, rigid	SIR transparent	BSP.161.241.ST.003	BSPS.10.182

General information

- suction plate for applications in the chipboard industry
- Diameter: 160 mm
- silicone seal with groove rubber support
- replaceable seal (held on the base plate by internal stress)
- aluminium base plate with R-K suspension: 10° pivoting on all sides
- vacuum feed through the base plate
- suspension bolts available in various sizes
- other seal versions available



Technical drawing

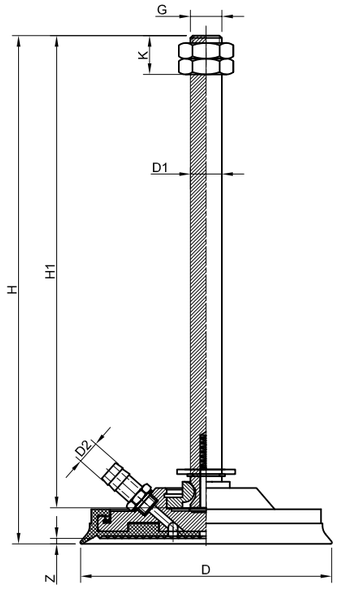

Example use



Technical data / Order data

Type	D	D1	D2	G	H	H1	K	Z	Weight (kg)	Carrying capacity* (kg)	
										vertical	horizontal
160 R, R-K	160	20	14,5	M 20	323	300	53	3,5	1,646	48,00	96,00

*) see page 8

Type	Material	Article number	
		Suction plate	Replacement seal
160 R, R-K	SIR transparent	BSP.161.241.RK.001	BSPS.10.182

Type BSP 160 SOF - Pressmaster

General information

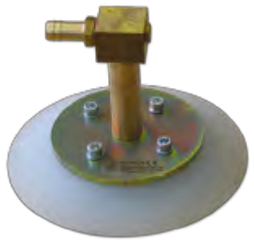

- suction plate for applications in the chipboard industry
- Diameter: 160 mm
- silicone seal with level supporting surface
- seal clamped between mounting plate and back plate
- brass base plate with rigid suspension
- central vacuum feed through the suspension bolt

Technical drawing

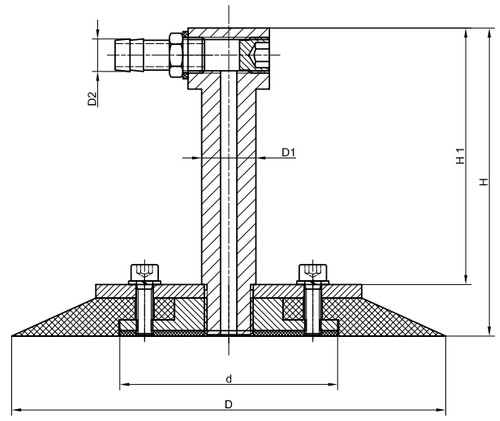

Technical data / Order data

Type	D	D1	D2	d	H	H1	Weight (kg)	Carrying capacity* (kg)	
								vertical	horizontal
160 SOF	160	20	12	81	106	87,5	1,093	57,00	115,00

*) see page 8

Type	Material	Hardness (Shore)	Article number	
			Suction plate	Replacement seal
160 SOF	SIR transparent	45	BSP.162.241.ST.009	BSPS.10.081.02
160 SOF	SIR transparent	55	BSP.162.241.ST.008	BSPS.10.081.01

Type BSP 160 R-SOF - Pressmaster

General information

- suction plate for applications in the chipboard industry
- Diameter: 160 mm
- silicone seal with groove rubber support
- replaceable seal (held on the base plate by internal stress)
- aluminium base plate with rigid suspension
- central vacuum feed through the suspension bolt
- other seal versions available



Technical drawing

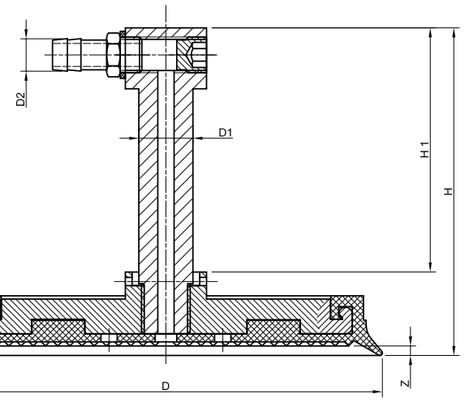

Example use



Technical data / Order data

Type	D	D1	D2	H	H1	Z	Weight (kg)	Carrying capacity* (kg)	
								vertical	horizontal
160 R-SOF	160	20	12	121	90	3,5	0,915	48,00	96,00

*) see page 8

Type	Material	Hardness (Shore)	Article number	
			Suction plate	Replacement seal
160 R-SOF	SIR transparent	50	BSP.161.241.ST.008	BSPS.10.182

General information



- suction plate for applications in the chipboard industry
- Diameter: 110 and 160 mm
- replaceable seal (held on the base plate by internal stress)
- aluminium base plate with A-P suspension: 10° pivoting on all sides
- central vacuum feed through the suspension bolt
- suspension bolts available in various sizes
- other seal versions available

Example use



Technical drawing

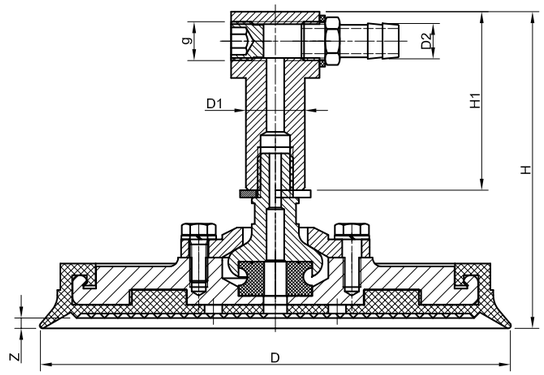

Technical data / Order data

Type	D	D1	D2	H	H1	Z	Weight (kg)	Carrying capacity* (kg)	
								vertikal	horizontal
110 R, A-P	110	20	12	122	75	3,5	0,66	23,00	46,00
160 R, A-P	160	20	12	130	83	3,5	1,04	48,00	96,00

*) see page 8

Type	Material	Article number	
		Suction plate	Replacement seal
110 R, A-P	SIR transparent	BSP.109.241.AP.002	BSPS.10.335
160 R, A-P	SIR transparent	BSP.161.241.AP.002	BSPS.10.182

General information

- suction plate for applications in the chipboard industry
- Diameter: 110 mm or 160 mm
- replaceable seal (held on the base plate by internal stress)
- aluminium base plate with R-K suspension: 10° pivoting on all sides
- vacuum feed through the base plate
- suspension bolts available in various sizes
- other seal versions available



Technical drawing

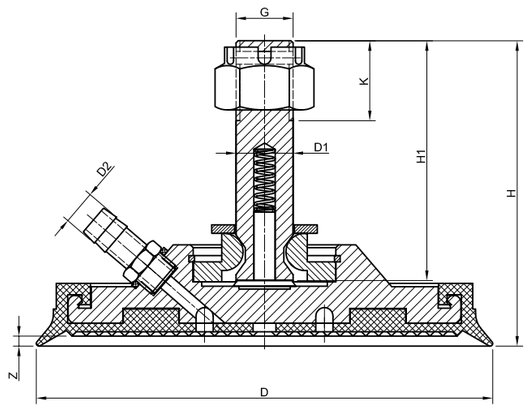

Example use



Technical data / Order data

Type	D	D1	D2	G	H	H1	K	Z	Weight (kg)	Carrying capacity* (kg)	
										vertical	horizontal
110 R, R-K	110	20	12	M20 x 1,5	113	64	28	4,0	0,731	23,00	46,00
160 R, R-K	160	20	12	M20 x 1,5	110	64	28	3,5	1,095	48,00	96,00

*) see page 8

Type	Material	Article number	
		Suction plate	Replacement seal
110 R, R-K	SIR transparent	BSP.109.241.RK.005	BSPS.10.335
160 R, R-K	SIR transparent	BSP.161.241.RK.005	BSPS.10.182

General information



- use in the timber products industry (coating systems, short-cycle presses, stacking systems)
- Diameter: 140 mm, 160 mm and 200 mm
- seal clamped between mounting plate and back plate

Technical drawing

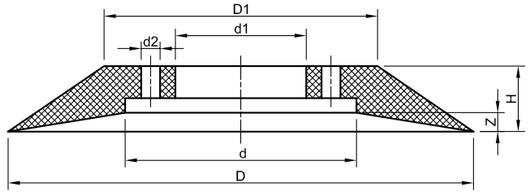

Technical data / Order data

Type	D	D1	d	d1	d2	H	Z	Weight (kg)	Carrying capacity* (kg)	
									vertical	horizontal
BSP 140 SO	140	88	70	20	7,4	28	11	0,180	40	90
BSP 160 SO	160	94	79,5	45	6,5	22,5	6,5	0,217	52	120
BSP 200 SO	200	140	110	40	11,5	35	12	0,404	80	180

*) see page 8

Type	Material	Article number
		Replacement seal
BSP 140 SO	SIR transparent	BSPS.10.224
BSP 160 SO	NBR grey	BSPS.10.107
BSP 160 SO	SIR transparent	BSPS.10.079
BSP 200 SO	SIR transparent	BSPS.10.126

General information

- suction plate for slightly coarse and structured surfaces
- Diameter: 135 mm
- long sealing lip with stiffening ribs
- replaceable seal (clamped with clamping clip) or vulcanized seal
- central vacuum feed
- base plate available in individual designs



Technical drawing

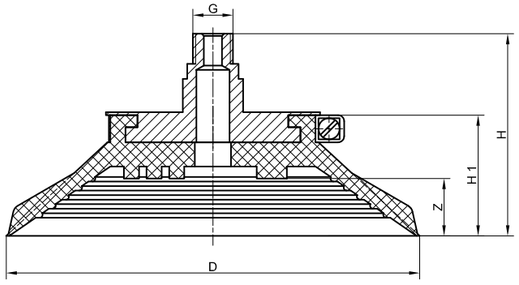

Example use



Technical data / Order data

Type	D	G	H	H1	Z	Weight (kg)	Carrying capacity* (kg)	
							vertical	horizontal
135 W	137	1/4“	67,0	40	19,0	0,330	34,00	69,00
135 W vul.	131	1/4“	50,0	35	17,0	0,200	34,00	69,00

*) see page 8

Type	Material	Article number	
		Flat suction cup	Replacement seal
BLSP 135 W	NBR grey	BLSP.135.121.000	BSPS.10.162
BLSP 135 W	SIR transparent	BLSP.135.241.000	BSPS.10.393
BLSP 135 W	NBR grey	BLSP.136.121.000	vulcanized
BLSP 135 W	SIR transparent	BLSP.136.241.000	vulcanized

General information



- robust suction plate for slightly coarse surfaces
- Diameter: 100 mm, 150 mm and 200 mm
- long sealing lip with stiffening ribs and groove rubber support
- replaceable seal (clamped with clamping clip)
- aluminium base plate
- drilling template available on customer request

Example use



Technical drawing

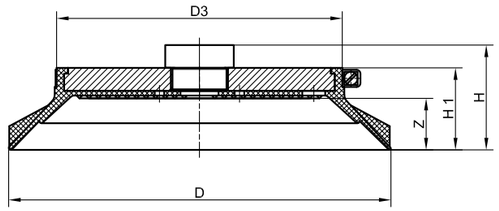

Technical data / Order data

Type	D	D3	H	H1	Z	Weight (kg)	Carrying capacity* (kg)	
							vertical	horizontal
BLSP 100 HE	100	75	26	18	6,3	0,115	15,00	30,00
BLSP 150 HE	152	112	40	28	10,5	0,350	43,00	87,00
BLSP 200 HE	200	150	55	43	27,0	0,730	77,00	155,00

*) see page 8

Type	Material	Article number	
		Flat suction cup	Replacement seal
BLSP 100 HE	NBR black	BLSP.101.111.000	BSPS.10.458
BLSP 100 HE	NBR grey	BLSP.101.121.000	BSPS.10.459
BLSP 100 HE	SIR transparent	BLSP.101.241.000	BSPS.10.460
BLSP 150 HE	NBR black	BLSP.151.111.000	BSPS.10.179
BLSP 150 HE	NBR grey	BLSP.151.121.000	BSPS.10.167
BLSP 200 HE	NBR black	BLSP.201.111.004	BSPS.10.229
BLSP 200 HE	NBR grey	BLSP.201.121.004	BSPS.10.241
BLSP 200 HE	SIR transparent	BLSP.201.241.004	BSPS.10.296

General information

- robust suction plate for slightly coarse surfaces (scaled sheet metal, particleboard and cement fibreboard)
- Diameter: 160 mm
- long sealing lip and support strip
- replaceable seal (clamped with clamping clip)
- aluminium base plate



Technical drawing

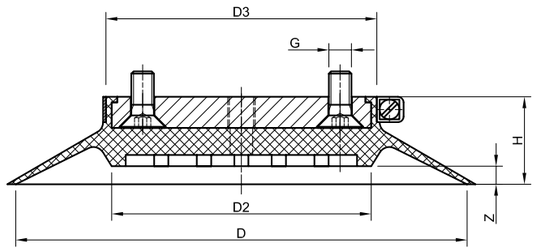

Example use



Technical data / Order data

Type	D	D3	D2	G	H	Z	Weight (kg)	Carrying capacity* (kg)	
								vertical	horizontal
BLSP 160 BY	160	96	92	M8	31	6,4	0,367	43,00	87,00

*) see page 8

Type	Material	Article number		
		Suction plate	Replacement seal	Clamping clip
BLSP 160 BY	NBR black	BLSP.161.111.001	BSPS.10.443	BSPS.11.001

General information



- robust suction plate for smooth and slightly coarse surfaces (metal sheets, wooden and glass panels)
- Diameter: 120 mm, 150 mm and 200 mm
- long sealing lip and support strip
- robust seal
- seal with vulcanised steel ring
- aluminium base plate
- drilling template available on customer request

Example use



Technical drawing

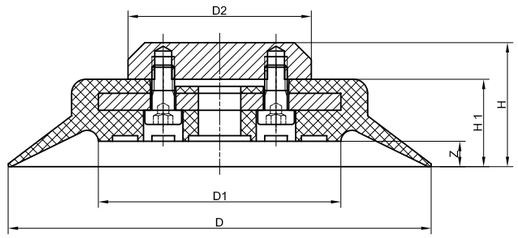

Technical data / Order data

Type	D	D1	H	H1	Z	Weight (kg)	Carrying capacity* (kg)	
							vertical	horizontal
BLSP 120 CO	124,0	65,0	37	24	6	0,385	26,00	52,00
BLSP 150 CO	150,0	65,0	44	31	9	0,480	47,00	94,00
BLSP 200 CO	200,0	65,0	50	37	15	1,000	82,00	164,00

*) see page 8

Type	Material	Article number	
		Flat suction cup	Replacement seal
BLSP 120 CO	NBR black	BLSP.122.111.000	BSPS.10.287
BLSP 150 CO	NBR black	BLSP.150.111.000	BSPS.10.402
BLSP 150 CO	NBR grey	BLSP.150.121.000	BSPS.10.145
BLSP 150 CO	SIR transparent	BLSP.150.241.000	BSPS.10.103
BLSP 200 CO	NBR black	BLSP.205.111.000	BSPS.10.366
BLSP 200 CO	NBR grey	BLSP.205.121.000	BSPS.10.146
BLSP 200 CO	SIR transparent	BLSP.205.241.000	BSPS.10.144

General information

- suction plate for vacuum clamping systems
- Diameter: 160 mm and 250 mm
- short sealing lip and burled rubber support
- replaceable seal (clamped with clamping clip)
- aluminium base plate
- drilling template available on customer request



Technical drawing

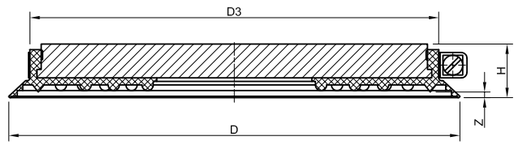

Example use

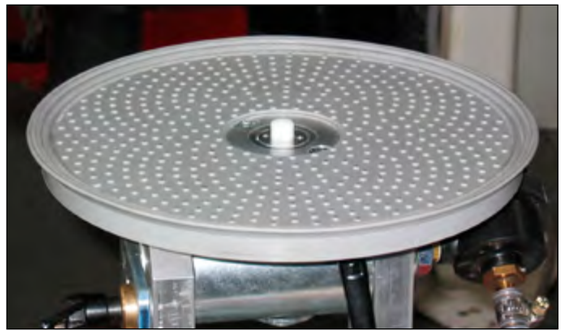

Technical data / Order data

Type	D	D3	H	Z	Weight (kg)	Carrying capacity* (kg)	
						vertical	horizontal
BLSP 160 NO	160	145	19	2,0	0,750	54,00	108,00
BLSP 250 NO	250	235	18	2,0	1,120	136,00	272,00

*) see page 8

Type	Material	Article number	
		Flat suction cup	Replacement seal
BLSP 160 NO	NBR black	BLSP.162.111.000	BSPS.10.405
BLSP 160 NO	NBR grey	BLSP.162.121.000	BSPS.10.099
BLSP 160 NO	SIR transparent	BLSP.162.241.000	BSPS.10.102
BLSP 250 NO	NBR grey	BLSP.251.121.000	BSPS.10.100
BLSP 250 NO	SIR transparent	BLSP.251.241.000	BSPS.10.101

General information

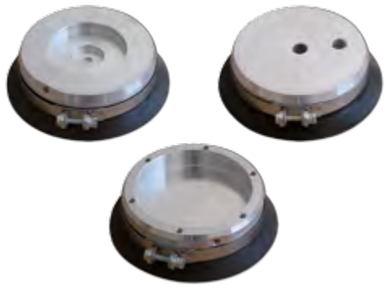

- robust suction plate for handling of sheet metal
- Diameter: 106 mm
- long sealing lip and smooth inner supporting surface
- replaceable seal (clamped with clamping clip)
- aluminium base plate

Technical drawing

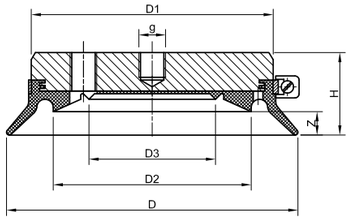

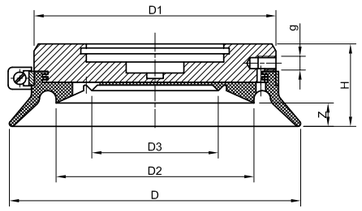

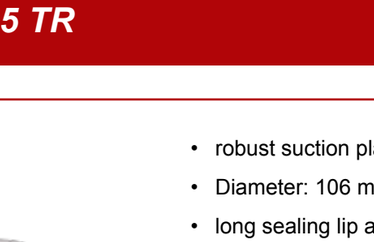

Technical data / Order data

Type	D	D1	D2	D3	g	H	Z	Weight (kg)	Carrying capacity* (kg)	
									vertical	horizontal
BLSP 115 TR-1	106	72	46	88	1/8“	30	8,5	0,276	21,00	42,00
BLSP 115 TR-2	106	72	46	88	M5	30	8,5	0,238	21,00	42,00
BLSP 115 TR-3	106	72	46	88	M5	30	8,5	0,128	21,00	42,00

*) see page 8

Type	Article number		
	Flat suction cup	Replacement seal	Clamping clip
BLSP 115 TR-1	BLSP.115.111.001	BSPS.10.367	BSPS.11.064
BLSP 115 TR-2	BLSP.115.111.002	BSPS.10.367	BSPS.11.064
BLSP 115 TR-3	BLSP.115.111.003	BSPS.10.367	BSPS.11.064

General information

- suction plate for heavily structured surfaces
- Diameter: 60 mm, 80 mm, 100 mm or 160 mm
- peak, soft double lip and with groove rubber support from Ø 100 mm
- replaceable seal
- aluminium base plate
- drilling template available on customer request



Technical drawing

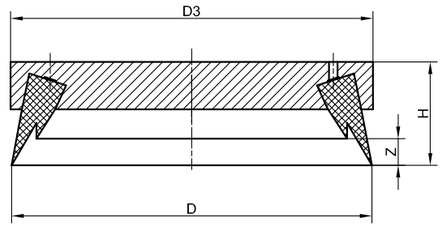

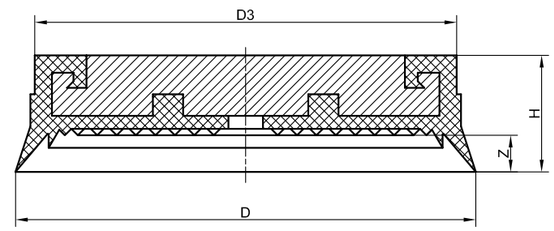

Technical data / Order data

Type	D	D3	H	Z	Weight (kg)	Carrying capacity* (kg)	
						vertical	horizontal
BLSP 60 DDK	62,5	64,0	24,0	6,0	0,087	7,00	14,00
BLSP 80 DDK	82,5	84,0	24,0	6,0	0,161	13,00	27,00
BLSP 100 DDK / R	107,0	96,0	27,0	8,5	0,258	20,00	40,00
BLSP 160 DDK / R	165,0	154,0	25,0	8,0	0,697	52,00	105,00

*) see page 8

Type	Material	Article number	
		Flat suction cup	Replacement seal
BLSP 60 DDK	NR grey	BLSP.063.126.000	BSPS.10.348
BLSP 80 DDK	NR grey	BLSP.083.126.000	BSPS.10.334
BLSP 100 DDK / R	NBR black	BLSP.103.111.000	BSPS.10.676
BLSP 100 DDK / R	NBR grey	BLSP.103.121.000	BSPS.10.677
BLSP 100 DDK / R	SIR transparent	BLSP.103.241.000	BSPS.10.645
BLSP 160 DDK / R	SIR transparent	BLSP.164.241.000	BSPS.10.438

General information



- universally applicable light suction plate for smooth surfaces (wood panels, sheet metals)
- Diameter: 60 mm, 80 mm and 95 mm
- medium-length sealing lip and groove rubber support
- replaceable seal (clamped with clamping clip)
- aluminium base plate
- drilling template available on customer request

Technical drawing

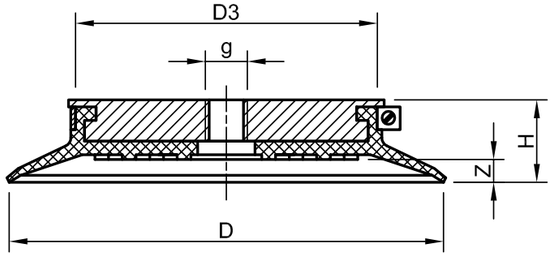

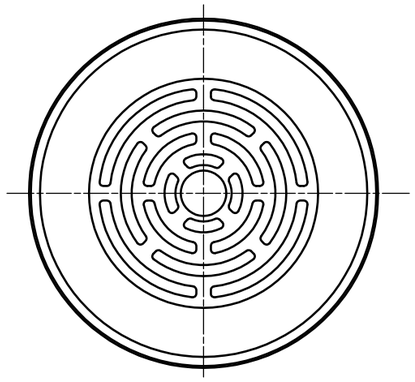

Technical data

Type	D	D3	g	H	Z	Weight (kg)	Carrying capacity* (kg)	
							vertical	horizontal
BLSP 60 L	60	37	see order data	17	5	0,030	7,00	14,00
BLSP 80 L	80	51	see order data	17	5	0,060	12,00	24,00
BLSP 95 L	95	66	see order data	18	5	0,102	19,00	38,00

*) see page 8

Example use

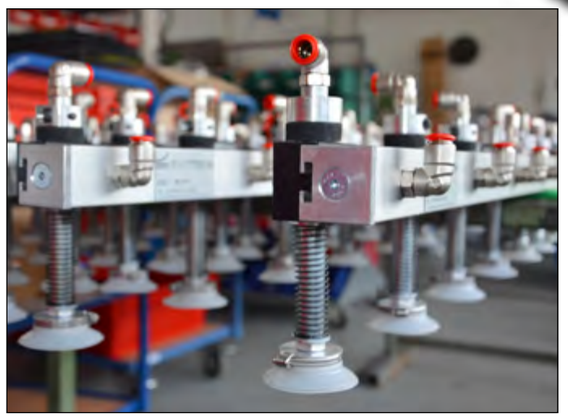

Order data

Type	Material	Article number				
		Flat suction cup with g = 1/8“	Flat suction cup with g = M10x1,25	Flat suction cup with g = 1/4“	Replacement seal	Clamping clip
BLSP 60 L	NBR black	BLSP.061.111.003	BLSP.061.111.002	BLSP.061.111.001	BSPS.10.131	BSPS.11.060
BLSP 60 L	NBR grey	BLSP.061.121.003	BLSP.061.121.002	BLSP.061.121.001	BSPS.10.132	BSPS.11.060
BLSP 60 L	SIR transparent	BLSP.061.241.003	BLSP.061.241.002	BLSP.061.241.001	BSPS.10.133	BSPS.11.060
BLSP 80 L	NBR black	BLSP.081.111.003	BLSP.081.111.002	BLSP.081.111.001	BSPS.10.121	BSPS.11.061
BLSP 80 L	NBR grey	BLSP.081.121.003	BLSP.081.121.002	BLSP.081.121.001	BSPS.10.124	BSPS.11.061
BLSP 80 L	SIR transparent	BLSP.081.241.003	BLSP.081.241.002	BLSP.081.241.001	BSPS.10.122	BSPS.11.061
BLSP 95 L	NBR black	BLSP.095.111.003	BLSP.095.111.002	BLSP.095.111.001	BSPS.10.134	BSPS.11.062
BLSP 95 L	NBR grey	BLSP.095.121.003	BLSP.095.121.002	BLSP.095.121.001	BSPS.10.135	BSPS.11.062
BLSP 95 L	SIR transparent	BLSP.095.241.003	BLSP.095.241.002	BLSP.095.241.001	BSPS.10.136	BSPS.11.062

General information



- oval suction plate for smooth and curved surfaces
- vulcanized or replaceable seal
- aluminium base plate
- drilling template available on customer request

Example use



Technical drawing

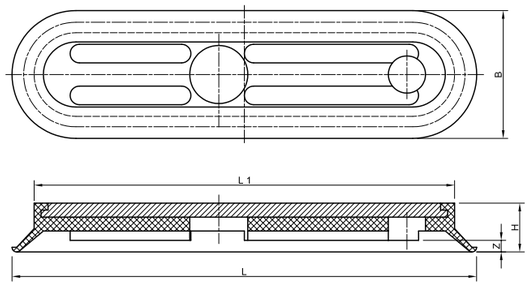

Technical data

Type	L	L1	B	H	Z	Weight (kg)	Carrying capacity* (kg)	
							vertical	horizontal
BLSP 25 x 200	200	190	25	20	5,0	0,113	8,00	16,00
BLSP 30 x 100	100	120	30	21	6,0	0,076	4,00	9,00
BLSP 30 x 200	200	189	30	20	5,0	0,159	10,00	21,00
BLSP 30 x 300	300	289	30	20	5,0	0,241	16,00	33,00
BLSP 45 x 135	136	115	45	19	5,0	0,069	10,00	21,00
BLSP 55 x 100	100	81	55	21	5,0	0,071	7,00	15,00
BLSP 55 x 150	150	131	55	21	5,0	0,120	14,00	28,00
BLSP 55 x 200	200	181	55	21	5,0	0,158	21,00	42,00
BLSP 55 x 300	300	281	55	20	7,0	0,201	35,00	70,00
BLSP 80 x 250	254	225	84	24	11,0	0,339	44,00	88,00
BLSP 80 x 380	380	355	80	30	13,0	0,680	67,00	134,00
BLSP 90 x 190	190	169	90	20	6,0	0,301	28,00	56,00
BLSP 100 x 200	200	168	100	24	8,0	0,313	32,00	65,00
BLSP 100 x 300	300	268	100	24	8,0	0,511	60,00	120,00
BLSP 120 x 300	300	260	120	35	15,0	0,807	68,00	137,00

*) see page 8

Order data

Type	Material	Article number	
		Flat suction cup	Replacement seal
BLSP 25 x 200	NBR black	BLSP.025.200.111.000	BSPS.10.260
BLSP 25 x 200	NBR grey	BLSP.025.200.121.000	BSPS.10.174
BLSP 25 x 200	SIR transparent	BLSP.025.200.241.000	BSPS.10.261
BLSP 30 x 100	NBR grey	BLSP.030.100.121.000	vulcanized
BLSP 30 x 200	NBR black	BLSP.030.200.111.000	BSPS.10.553
BLSP 30 x 200	NBR grey	BLSP.030.200.121.000	BSPS.10.353
BLSP 30 x 200	SIR transparent	BLSP.030.200.241.000	BSPS.10.557
BLSP 30 x 300	NBR black	BLSP.030.300.111.000	BSPS.10.545
BLSP 30 x 300	NBR grey	BLSP.030.300.121.000	BSPS.10.345
BLSP 30 x 300	SIR transparent	BLSP.030.300.241.000	BSPS.10.546
BLSP 45 x 135	NBR black	BLSP.045.135.111.000	BSPS.10.262.01
BLSP 45 x 135	NBR grey	BLSP.045.135.121.000	BSPS.10.558.01
BLSP 45 x 135	SIR transparent	BLSP.045.135.241.000	BSPS.10.257.01
BLSP 45 x 135	NBR white	BLSP.045.135.122.000	BSPS.10.253.01
BLSP 55 x 100	NBR black	BLSP.055.100.111.000	BSPS.10.377
BLSP 55 x 100	NBR grey	BLSP.055.100.121.000	BSPS.10.376
BLSP 55 x 100	SIR transparent	BLSP.055.100.241.000	BSPS.10.378
BLSP 55 x 150	NBR black	BLSP.055.150.111.000	BSPS.10.379
BLSP 55 x 150	NBR grey	BLSP.055.150.121.000	BSPS.10.380
BLSP 55 x 150	SIR transparent	BLSP.055.150.241.000	BSPS.10.382
BLSP 55 x 200	NBR black	BLSP.055.200.111.000	BSPS.10.263
BLSP 55 x 200	NBR grey	BLSP.055.200.121.000	BSPS.10.120
BLSP 55 x 200	NBR grey	BLSP.055.200.121.006	vulcanized
BLSP 55 x 200	SIR transparent	BLSP.055.200.241.000	BSPS.10.264
BLSP 55 x 300	NBR black	BLSP.055.300.111.000	BSPS.10.265
BLSP 55 x 300	NBR grey	BLSP.055.300.121.000	BSPS.10.119
BLSP 55 x 300	NBR grey	BLSP.055.300.121.006	vulcanized
BLSP 55 x 300	SIR transparent	BLSP.055.300.241.000	BSPS.10.218
BLSP 80 x 250	NBR black	BLSP.080.250.111.000	BSPS.10.267
BLSP 80 x 250	NBR grey	BLSP.080.250.121.000	BSPS.10.251
BLSP 80 x 250	SIR transparent	BLSP.080.250.241.000	BSPS.10.252
BLSP 80 x 380	NBR black	BLSP.080.380.111.000	BSPS.10.285
BLSP 80 x 380	NBR grey	BLSP.080.380.121.000	BSPS.10.284
BLSP 80 x 380	SIR transparent	BLSP.080.380.241.000	BSPS.10.286
BLSP 90 x 190	NBR black	BLSP.090.190.111.000	BSPS.10.232
BLSP 90 x 190	NBR grey	BLSP.090.190.121.000	BSPS.10.270
BLSP 90 x 190	SIR transparent	BLSP.090.190.241.000	BSPS.10.551
BLSP 100 x 200	NBR black	BLSP.100.200.111.000	BSPS.10.215
BLSP 100 x 200	NBR grey	BLSP.100.200.121.000	BSPS.10.214
BLSP 100 x 200	SIR transparent	BLSP.100.200.241.000	BSPS.10.268
BLSP 100 x 300	NBR black	BLSP.100.300.111.000	BSPS.10.137.01
BLSP 100 x 300	NBR grey	BLSP.100.300.121.000	BSPS.10.138.05
BLSP 100 x 300	SIR transparent	BLSP.100.300.241.000	BSPS.10.271
BLSP 120 x 300	NBR black	BLSP.120.300.111.000	BSPS.10.269
BLSP 120 x 300	NBR grey	BLSP.120.300.121.000	BSPS.10.188
BLSP 120 x 300	SIR transparent	BLSP.120.300.241.000	BSPS.10.219

Type BLSP 180 x 580 L

General information



- oval suction plate for smooth surfaces (metal sheets, wooden panels)
- Dimensions: 180 x 580 mm
- long sealing lip with supporting surfaces
- vulcanized seal
- steel base plate
- drilling template available on customer request

Technical drawing

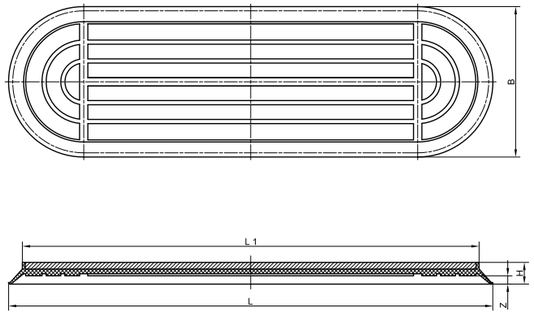

Technical data / Order data

Type	L	L1	B	H	Z	Weight (kg)	Carrying capacity* (kg)	
							vertical	horizontal
BLSP 180 x 580 L	580	547	180	26	10	5,440	226,00	453,00

*) see page 8

Type	Material	Article number
		Flat suction cup
BLSP 180 x 580 L	NBR black	BLSP.180.580.111.000
BLSP 180 x 580 L	NBR grey	BLSP.180.580.121.000
BLSP 180 x 580 L	SIR transparent	BLSP.180.580.241.000

General information

- robust suction plate with high carrying capacity for big vacuum lifting beams (aluminium and steel production)
- Dimensions: 410 x 810 mm
- long sealing lip with stiffening ribs
- replaceable seal
- steel- or aluminium base plate



Technical drawing

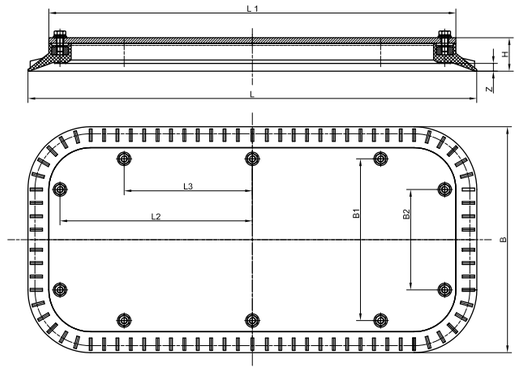

Example use



Technical data / Order data

Type	L	L1	L2	L3	B	B1	B2	H	H1	Z	Weight** (kg)	Carrying capacity* (kg)	
												vertical	horizontal
BLSP 410 x 810 XXL	805	730	345	230	405	290	180	60	50	14,0	23,90	810,00	1621,00

*) see page 8; **) Weight refers to flat suction cup steel

Type	Material	Article number		
		Flat suction cup steel***	Flat suction cup aluminium***	Replacement seal
BLSP 410 x 810 XXL	NBR black	BLSP.410.810.111.000	BLSP.410.810.111.001	BSPS.10.047
BLSP 410 x 810 XXL	NBR grey	BLSP.410.810.121.000	BLSP.410.810.121.001	BSPS.10.048
BLSP 410 x 810 XXL	SIR transparent	BLSP.410.810.241.000	BLSP.410.810.241.001	BSPS.10.049
BLSP 410 x 810 XXL	NK grey	-	-	BSPS.10.440

***) base plate either made of galvanized steel or aluminium. The vulcanized ring is made of steel.

Type BLSP 380 x 500 XL

General information



- robust suction plate with high carrying capacity for slightly coarse surfaces (scaled sheet metal, aluminium and steel sheets)
- Dimensions: 380 x 500 mm
- long sealing lip with stiffening ribs
- inner and outer base plates from aluminium
- drilling template available on customer request

Example use



Technical drawing

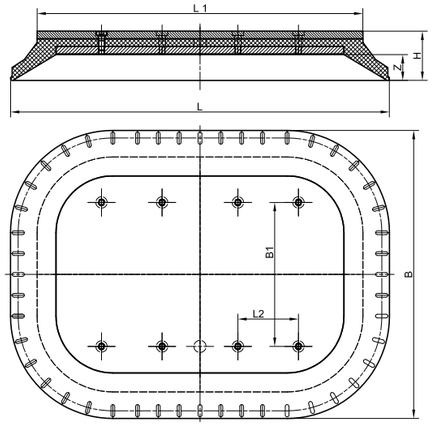

Technical data / Order data

Type	L	L1	L2	B	B1	H	Z	Weight (kg)	Carrying capacity* (kg)	
									vertical	horizontal
BLSP 380 x 500 XL	500	430	80	380	190	65	34	9,480	378,00	756,00

*) see page 8

Type	Material	Article number	
		Flat suction cup	Replacement seal
BLSP 380 x 500 XL	NBR black	BLSP.380.500.111.000	BSPS.10.435

Type BLSP 350 x 600 XL

General information

- robust suction plate with high carrying capacity for slightly coarse surfaces (scaled sheet metal, aluminium and steel sheets)
- Dimensions: 350 x 600 mm
- long sealing lip with stiffening ribs
- inner and outer base plates from aluminium
- drilling template available on customer request



Technical drawing

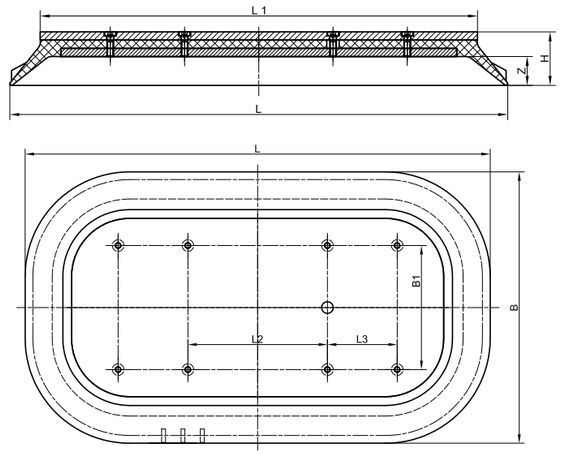

Technical data / Order data

Type	L	L1	L2	L3	B	B1	H	Z	Weight (kg)	Carrying capacity* (kg)	
										vertical	horizontal
BLSP 350 x 600 XL	600	530	180	90	350	180	65	35	9,880	435,00	870,00

*) see page 8

Type	Material	Article number	
		Flat suction cup	Replacement seal
BLSP 350 x 600 XL	NBR black	BLSP.350.600.111.000	BSPS.10.195
BLSP 350 x 600 XL	NBR grey	BLSP.350.600.121.000	BSPS.10.256
BLSP 350 x 600 XL	FPM black	BLSP.350.600.124.000	BSPS.10.417

02 Flat suction cups

Flat suction cup ranges and types 78

Series BSC A 78
Series BSC B 79
Series BSC CO 80
Series BSC W 81
Type BSC 40 P 82
Type BSC 40 PF 83
Type BSC 82 MA 84
Type BSC 120 S 85

Series BSC A

General information



- flat suction cup for smooth to lightly structured surfaces
- Diameter: 20 mm to 75 mm
- seal is pulled over the connection nipple and held in place by internal stress

Technical drawing

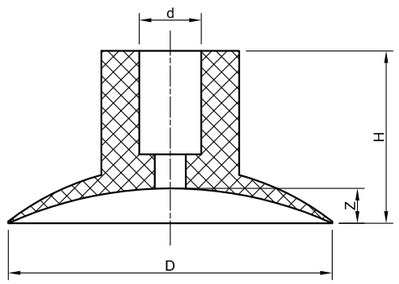

Technical data / Order data

Type	Material	D	d	H	Z	Weight (g)	Carrying capacity* (g)		Connection nipple group	Article number
							vertical	horizontal		
BSC 20 A	NBR black	20	4	15	4	1,20	750	1500	E1	BSC.1.020.1.00
BSC 20 A	SIR transparent	20	4	15	4	1,20	750	1500	E1	BSC.1.020.4.00
BSC 28 A	NBR black	28	5	14	3	3,20	1500	3000	E1	BSC.1.028.1.00
BSC 28 A	SIR transparent	28	5	14	3	3,20	1500	3000	E1	BSC.1.028.4.00
BSC 32 A	NBR black	32	5	14	3	3,20	1900	3900	E1	BSC.1.032.1.00
BSC 32 A	NBR grey	32	5	14	3	3,20	1900	3900	E1	BSC.1.032.2.00
BSC 32 A	SIR transparent	32	5	14	3	3,20	1900	3900	E1	BSC.1.032.4.00
BSC 38 A	NBR black	35	8	23	3	8,60	2400	4800	-	BSC.1.038.1.00
BSC 38 A	SIR transparent	35	8	23	3	8,60	2400	4800	-	BSC.1.038.4.00
BSC 45 A	NBR black	45	9	25	3	9,70	4000	8000	-	BSC.1.045.1.00
BSC 45 A	SIR transparent	45	9	25	3	9,70	4000	8000	-	BSC.1.045.4.00
BSC 47 A	NBR black	47	9	25	5	11,00	4000	8000	-	BSC.1.047.1.00
BSC 47 A	NBR grey	47	9	25	5	11,00	4000	8000	-	BSC.1.047.2.00
BSC 47 A	SIR transparent	47	9	25	5	11,00	4000	8000	-	BSC.1.047.4.00
BSC 60 A	NBR black	60	8	24	7	15,40	6000	12000	-	BSC.1.060.1.00
BSC 60 A	NBR grey	60	8	24	7	15,40	6000	12000	-	BSC.1.060.2.00
BSC 60 A	SIR transparent	60	8	24	7	15,40	6000	12000	-	BSC.1.060.4.00
BSC 75 A	SIR transparent	75	9	37	17	21,20	12000	25000	-	BSC.1.075.4.00
BSC 75 A	NR black	75	9	37	17	21,20	12000	25000	-	BSC.1.075.5.00

*) see page 8

Series BSC B

General information

- flat suction cup for smooth to lightly structured surfaces
- Diameter: 3 mm to 25 mm
- seal is pulled over the connection nipple and held in place by internal stress



Technical drawing

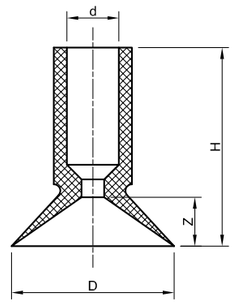

Technical data / Order data

Type	Material	D	d	H	Z	Weight (g)	Carrying capacity* (g)		Connection nipple group	Article number
							vertical	horizontal		
BSC 4 B	NBR black	4	2	12	1	0,19	23,5	47	E0	BSC.2.004.1.00
BSC 4 B	SIR red	4	2	12	1	0,19	23,5	47	E0	BSC.2.004.3.00
BSC 6 B	NBR black	6	2	11	2	0,20	37,5	75	E0	BSC.2.006.1.00
BSC 6 B	SIR red	6	2	11	2	0,20	80	160	E0	BSC.2.006.3.00
BSC 6 B	SIR transparent	6	2	11	2	0,20	80	160	E0	BSC.2.006.4.00
BSC 8 B	NBR black	8	2	8	2	0,20	150	300	-	BSC.2.008.1.00
BSC 8 B	SIR transparent	8	2	8	2	0,20	150	300	-	BSC.2.008.3.00
BSC 10 B	NBR black	9	3	13	2	0,20	235	470	E0	BSC.2.010.1.00
BSC 10 B	SIR red	9	3	13	2	0,25	235	470	E0	BSC.2.010.3.00
BSC 16 B	NBR black	16	5	20	4	0,25	235	470	E2	BSC.2.016.1.00
BSC 16 B	SIR red	16	5	20	4	0,79	600	1200	E2	BSC.2.016.3.00
BSC 16 B	SIR transparent	16	5	20	4	0,79	600	1200	E2	BSC.2.016.4.00
BSC 25 B	NBR black	25	8	30	7	2,70	1100	2200	E3	BSC.2.025.1.00
BSC 25 B	SIR transparent	25	8	30	7	2,70	1100	2200	E3	BSC.2.025.4.00

*) see page 8

General information



- flat suction cup for smooth surfaces
- Diameter: 20 mm to 50 mm
- seal is pulled over the connection nipple and held in place by internal stress

Technical drawing

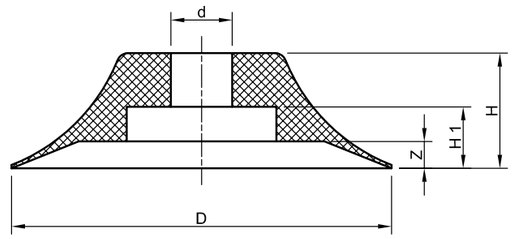

Technical data / Order data

Type	Material	D	d	H	H1	Z	Weight (kg)	Carrying capacity* (kg)		Connection nipple group	Article number
								vertical	horizontal		
BSC 20 CO	SIR transparent	19	5	10	5	2	0,001	0,75	1,50	-	BSC.8.020.4.00
BSC 30 CO	SIR transparent	31	6	14	7	4	0,004	2,00	4,00	CO	BSC.8.030.4.00
BSC 40 CO	NBR black	41	6	14	7	4	0,008	3,00	7,00	CO	BSC.8.040.1.00
BSC 50 CO	NBR black	49	8	15	8	3	0,009	4,00	8,00	CO	BSC.8.050.1.00
BSC 50 CO	SIR transparent	49	8	15	8	3	0,009	4,00	8,00	CO	BSC.8.050.4.00

*) see page 8

General information

- flat suction cup for smooth and slightly coarse surfaces
- Diameter: 60 mm and 90 mm
- long sealing lip



Technical drawing

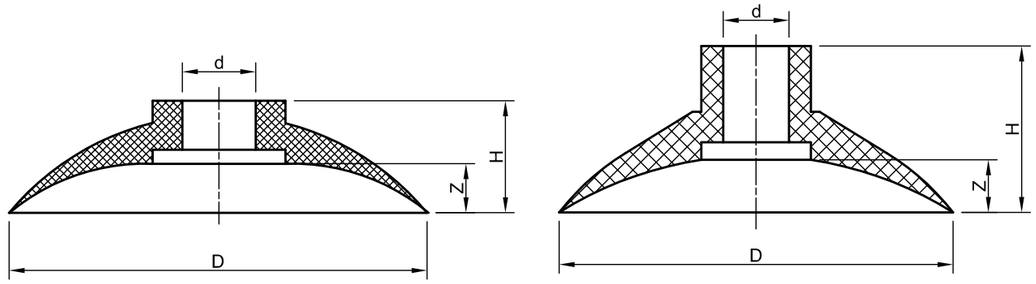

Technical data / Order data

Type	Material	D	d	H	Z	Weight (kg)	Carrying capacity* (kg)		Connection nipple group	Article number	
							vertical	horizontal		Flat suction cups	Replacement seal
BSC 60 W	NBR black	60	2	26	7	0,019	7,00	14,00	W060	BLSP.062.111.001	BSC.0.060.1.00
BSC 60 W	NBR grey	60	2	26	7	0,019	7,00	14,00	W060	BLSP.062.121.001	BSC.0.060.2.00
BSC 60 W	SIR transp.	60	2	26	7	0,019	7,00	14,00	W060	BLSP.062.241.001	BSC.0.060.4.00
BSC 90 W	NBR black	90	5	52	12	0,070	17,00	34,00	W090	BLSP.092.111.001	BSC.0.090.1.00
BSC 90 W	SIR transp.	90	5	52	12	0,070	17,00	34,00	W090	BLSP.092.241.001	BSC.0.090.4.00
BSC 90 W	NR grey	90	5	52	12	0,070	17,00	34,00	W090	BLSP.092.126.001	BSC.0.090.5.00
BSC 90 W-ITG	SIR transp.	91	5	51	13	0,062	16,00	32,00	W090	BLSP.093.241.001	BSC.0.091.4.00
BSC 90 W-ITG	NBR white	91	5	51	13	0,062	16,00	32,00	W090	BLSP.093.127.001	BSC.0.091.5.00

*) see page 8

Type BSC 40 P

General information



- flat suction cup for handling paper and film
- Diameter: 40 mm
- support strip and small inner volume
- seal is pulled over the connection nipple and held in place by internal stress

Technical drawing

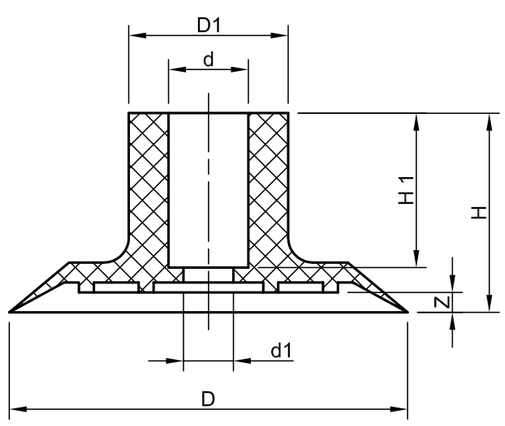

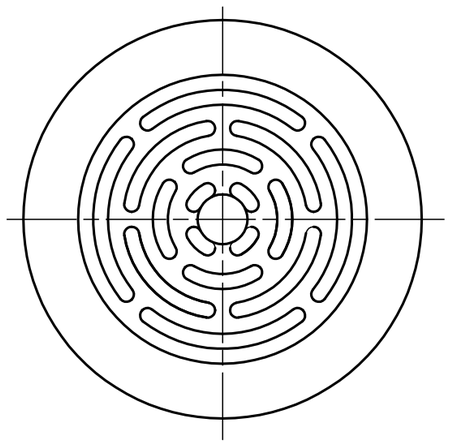

Technical data / Order data

Type	D	D1	d	d1	H	H1	Z	Weight (kg)	Carrying capacity* (kg)	
									vertical	horizontal
BSC 40 P	40	16	8	5	19	16	2	0,006	3,00	6,00

*) see page 8

Type	Material	Article number
		Flat suction cup seals
BSC 40 P	NBR white	BSC.17.040.1.00
BSC 40 P	NBR grey	BSC.17.040.2.00
BSC 40 P	SIR transparent	BSC.17.040.4.00
BSC 40 P	NR grey	BSC.17.040.5.00

Type BSC 40 PF

General information

- flat suction cup for handling paper and film
- Diameter: 40 mm
- support strip and small inner volume
- seal is pulled over the connection nipple and held in place by internal stress



Technical drawing

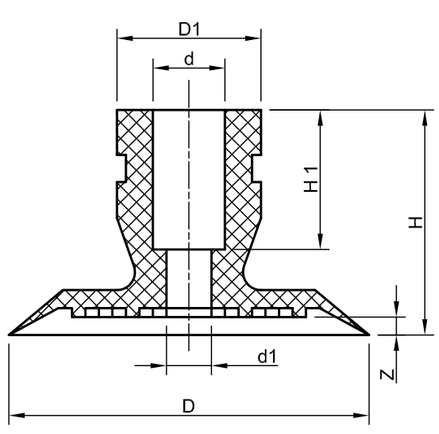

Example use



Technical data / Order data

Type	D	D1	d	d1	H	H1	Z	Weight (kg)	Carrying capacity* (kg)	
									vertical	horizontal
BSC 40 PF	40	16	8	5	25	15	2	0,006	3,00	6,00

*) see page 8

Type	Material	Article number
		Flat suction cup seals
BSC 40 PF	NBR white	BSC.18.040.1.00
BSC 40 PF	SIR white	BSC.18.040.4.00
BSC 40 PF	NR brown	BSC.18.040.5.00

Type BSC 82 MA

General information



- flat suction cup for use in the furniture industry
- Diameter: 82 mm
- long sealing lip and support strip with large inner volume
- seal is pulled over the connection nipple and held in place by internal stress

Technical drawing

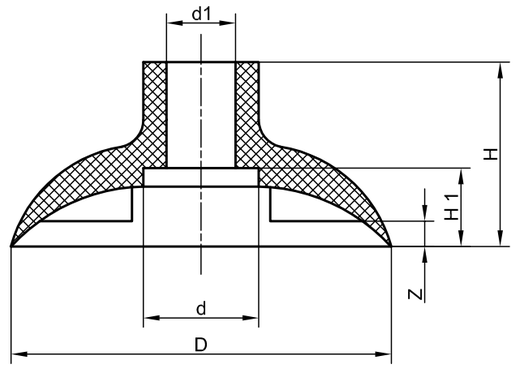

Technical data / Order data

Type	D	d	d1	H	H1	Z	Weight (kg)	Carrying capacity* (kg)	
								vertical	horizontal
BSC 82 MA	82	25	15	40	17	5	0,055	15,00	30,00

*) see page 8

Type	Material	Connection nipple group	Article number
			Flat suction cup seals
BSC 82 MA	NBR grey	W090	BSC.0.082.2.00
BSC 82 MA	NR grey	W090	BSC.0.082.5.00

Type BSC 120 S

General information

- flat suction cup for smooth surfaces
- Diameter: 120 mm
- long, flat supporting surface
- rapid suction and ventilation through small inner volume
- vulcanized connection nipple
- steel connection nipple



Technical drawing

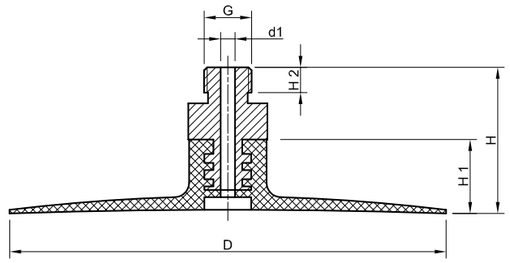

Example use

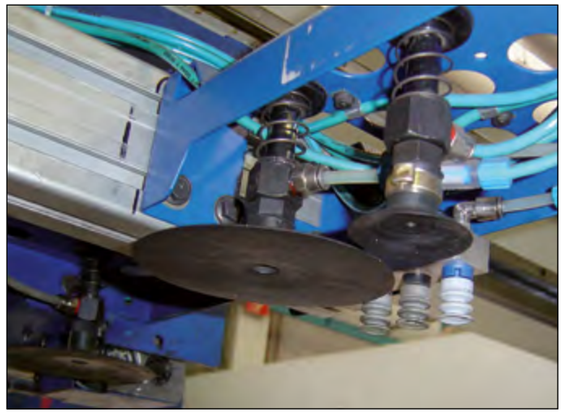

Technical data / Order data

Type	D	d1	G	H	H1	H2	SW	Weight (kg)	Carrying capacity* (kg)	
									vertical	horizontal
BSC 120 S	121	4	1/4“	40	20	7	19	0,085	33,00	66,00

*) see page 8

Type	Material	Article number
		Flat suction cup
BSC 120 S	NBR black	BLSP.121-S.111.000

03 Bellow suction cups

Bellow suction cup ranges and types 88

Series BSC D 88
Series BSC FE 90
Series BSC E 92
Series BSC F 94
Type BSC 89 SCP 95
Type BSC 82 L 96
Type BSC 70 CA 97
Type BSC 50 FL 98
Type BBSC 60 x 140 99
Series BBSC CO 100
Series BBSC P 101
Series BBSC R 102
Type BBSC 150 - 2,5 104
Type BBSC 150 CO - 3,5 105

www.euro-tech-vacuum.com

General information



- bellow suction cup with 1.5 folds and medium-length sealing lip
- Diameter: 11 mm to 80 mm
- seal is pulled over the connection nipple and held in place by internal stress

Example use



Technical data

Type	D	d	H	Z	Weight (kg)	Carrying capacity* (kg)	
						vertical	horizontal
BSC 11 D	11,0	5,0	16,0	7,0	0,001	0,100	0,200
BSC 16 D	15,5	5,0	19,5	10,5	0,001	0,410	0820
BSC 16 D	15,5	5,0	19,5	10,5	0,001	0,255	0,510
BSC 20 D	18,5	5,0	15,5	6,8	0,001	0560	1,120
BSC 20 D	18,5	5,0	15,5	6,8	0,001	0,561	1,120
BSC 22 D	25,0	4,5	19,0	12,0	0,002	0,561	1,120
BSC 25 D	25,0	4,5	22,5	15,0	0,002	0,650	1,430
BSC 37 D	33,0	8,0	27,0	9,0	0,007	1,735	3,470
BSC 37 D	33,0	8,0	27,0	9,0	0,007	1,480	2,960
BSC 38 D	38,0	8,0	27,0	9,0	0,008	1,735	3,470
BSC 38 D	38,0	8,0	27,0	9,0	0,008	1,480	2,960
BSC 43 D	43,0	8,0	27,0	9,0	0,012	2,500	4,990
BSC 43 D	43,0	8,0	27,0	9,0	0,012	2,345	4,690
BSC 53 D	54,0	8,0	33,0	13,0	0,025	4,230	8,460
BSC 53 D	54,0	8,0	33,0	13,0	0,025	4,230	8,460
BSC 65 D	64,0	13,0	31,0	10,0	0,015	3,875	7,750
BSC 65 D	64,0	13,0	31,0	10,0	0,015	7,085	14,170
BSC 80 D	80,0	11,8	45,0	14,0	0,068	9,890	19,780
BSC 80 D	80,0	11,8	45,0	14,0	0,068	8,565	17,130

*) see page 8

Technical drawing

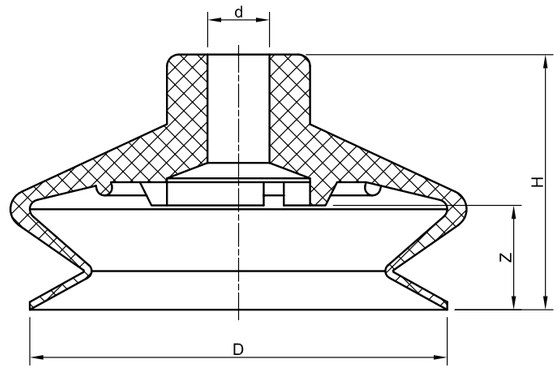

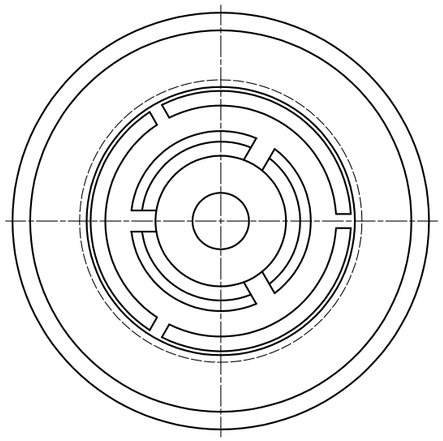

Order data

Type	Material	Connection nipple group	Article number
BSC 11 D	NBR black	E1	BSC.4.011.1.00
BSC 11 D	SIR transparent	E1	BSC.4.011.4.00
BSC 16 D	NBR black	E1	BSC.4.016.1.00
BSC 16 D	SIR transparent	E1	BSC.4.016.4.00
BSC 20 D	NBR black	E1	BSC.4.020.1.00
BSC 20 D	SIR transparent	E1	BSC.4.020.4.00
BSC 22 D	NBR black	E1	BSC.4.022.1.00
BSC 22 D	SIR transparent	E1	BSC.4.022.4.00
BSC 25 D	NBR black	E1	BSC.4.025.1.00
BSC 25 D	SIR transparent	E1	BSC.4.025.4.00
BSC 37 D	NBR black	E4	BSC.4.037.1.00
BSC 37 D	NBR grey	E4	BSC.4.037.2.00
BSC 37 D	SIR transparent	E4	BSC.4.037.4.00
BSC 38 D	NBR black	E4	BSC.4.038.1.00
BSC 38 D	NBR grey	E4	BSC.4.038.2.00
BSC 38 D	SIR transparent	E4	BSC.4.038.4.00
BSC 43 D	NBR black	E4	BSC.4.043.1.00
BSC 43 D	NBR grey	E4	BSC.4.043.2.00
BSC 43 D	SIR transparent	E4	BSC.4.043.4.00
BSC 53 D	NBR black	E4	BSC.4.053.1.00
BSC 53 D	NBR grey	E4	BSC.4.053.2.00
BSC 53 D	SIR transparent	E4	BSC.4.053.4.00
BSC 65 D	NBR black	E6	BSC.4.065.1.00
BSC 65 D	NBR grey	E6	BSC.4.065.2.00
BSC 65 D	SIR transparent	E6	BSC.4.065.4.00
BSC 80 D	NBR black	E5	BSC.4.080.1.00
BSC 80 D	NBR grey	E5	BSC.4.080.2.00
BSC 80 D	SIR transparent	E5	BSC.4.080.4.00

General information



- bellow suction cup with 1.5 folds and long sealing lip
- Diameter: 30 mm to 75 mm
- seal is pulled over the connection nipple and held in place by internal stress

Example use

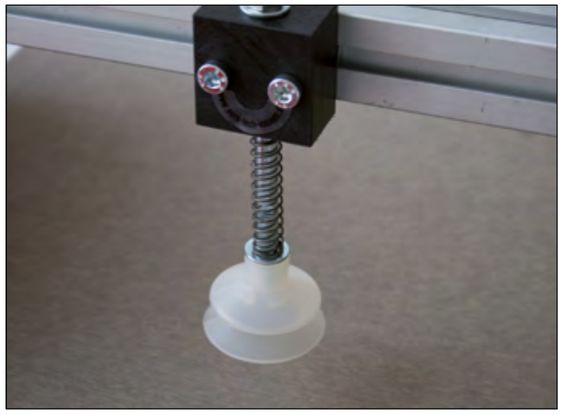

Technical data

Type	D	d	H	Z	Weight (kg)	Carrying capacity* (kg)	
						vertical	horizontal
BSC 30 FE	30	8,0	29,5	11,5	0,005	1,880	3,770
BSC 45 FE	45	8,5	41,0	20,0	0,016	4,400	8,800
BSC 55 FE	55	10,0	40,0	18,0	0,014	6,700	13,500
BSC 75 FE	75	10,0	40,0	18,5	0,026	12,800	25,600

*) see page 8

Technical drawing

30 FE + 45 FE

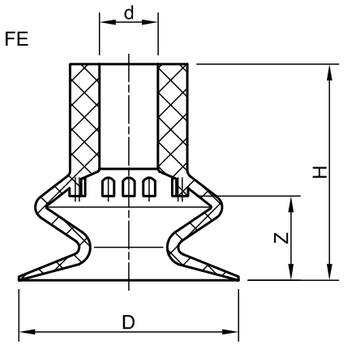

55 FE + 75 FE

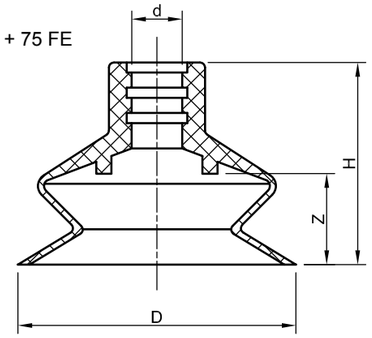

Order data

Type	Material	Connection nipple group	Article number
BSC 30 FE	NBR black	E4	BSC.6.030.1.00
BSC 30 FE	NBR grey	E4	BSC.6.030.2.00
BSC 30 FE	SIR transparent	E4	BSC.6.030.4.00
BSC 30 FE	SIR red	E4	BSC.6.030.3.00
BSC 45 FE	NBR black	E4	BSC.6.045.1.00
BSC 45 FE	NBR grey	E4	BSC.6.045.2.00
BSC 45 FE	SIR transparent	E4	BSC.6.045.4.00
BSC 45 FE	SIR red	E4	BSC.6.045.3.00
BSC 55 FE	NBR black	E7	BSC.6.055.1.00
BSC 55 FE	NBR grey	E7	BSC.6.055.2.00
BSC 55 FE	SIR transparent	E7	BSC.6.055.4.00
BSC 55 FE	SIR red	E7	BSC.6.055.3.00
BSC 75 FE	NBR black	E7	BSC.6.075.1.00
BSC 75 FE	SIR transparent	E7	BSC.6.075.4.00
BSC 75 FE	SIR red	E7	BSC.6.075.3.00
BSC 75 FE	NR grey	E7	BSC.6.075.6.00

General information



- bellow suction cup with 2.5 folds and medium-length sealing lip
- Diameter: 6 mm to 88 mm
- seal is pulled over the connection nipple and held in place by internal stress

Example use



Technical data

Type	D	d	H	Z	Weight (kg)	Carrying capacity* (kg)	
						vertical	horizontal
BSC 7 E	6,0	4,5	13,5	7,0	0,001	0,050	0,100
BSC 9 E	9,0	5,0	15,0	6,0	0,001	0,150	0,310
BSC 14 E	14,0	5,0	23,0	14,0	0,002	0,251	0,510
BSC 18 E	18,0	4,5	22,0	13,0	0,002	0,560	1,120
BSC 18 E	18,0	4,5	22,0	13,0	0,002	0,410	0,820
BSC 20 E	20,0	4,5	22,0	13,0	0,003	0,560	1,120
BSC 20 E	20,0	4,5	22,0	13,0	0,003	0,410	0,820
BSC 25 E	25,0	5,0	34,5	24,5	0,005	0,715	1,430
BSC 25 E	25,0	5,0	34,5	24,5	0,005	0,560	1,120
BSC 32 E	32,5	7,5	36,0	19,0	0,011	1,735	3,470
BSC 32 E	32,5	7,5	36,0	19,0	0,011	1,580	3,160
BSC 42 E	42,0	8,0	46,0	29,0	0,022	2,345	4,690
BSC 42 E	42,0	8,0	46,0	29,0	0,022	2,190	4,380
BSC 50 E	50,0	11,0	50,0	29,0	0,026	3,060	6,120
BSC 53 E	51,5	8,0	45,0	27,5	0,022	2,805	5,610
BSC 53 E	51,5	8,0	45,0	27,5	0,023	2,800	5,300
BSC 62 E	62,0	8,0	50,0	32,0	0,046	4,230	8,460
BSC 62 E	62,0	8,0	50,0	32,0	0,046	3,210	6,420
BSC 85 E	89,0	12,0	89,0	63,0	0,088	6,930	13,86
BSC 88 E	88,0	12,0	85,0	58,0	0,178	11,320	22,63
BSC 88 E	88,0	12,0	85,0	58,0	0,178	6,475	12,95

*) see page 8

Technical drawing

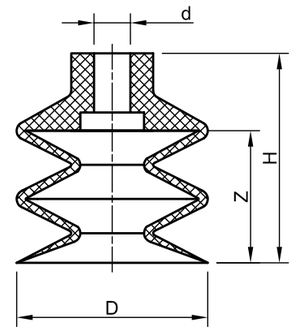

Order data

Type	Material	Connection nipple group	Article number
BSC 7 E	NBR black	E1	BSC.5.007.1.00
BSC 7 E	SIR transparent	E1	BSC.5.007.4.00
BSC 9 E	NBR black	E1	BSC.5.009.1.00
BSC 9 E	SIR transparent	E1	BSC.5.009.4.00
BSC 14 E	NBR black	E1	BSC.5.014.1.00
BSC 14 E	SIR transparent	E1	BSC.5.014.4.00
BSC 18 E	NBR black	E1	BSC.5.018.1.00
BSC 18 E	SIR transparent	E1	BSC.5.018.4.00
BSC 20 E	NBR black	E1	BSC.5.020.1.00
BSC 20 E	SIR transparent	E1	BSC.5.020.4.00
BSC 25 E	NBR black	E1	BSC.5.025.1.00
BSC 25 E	SIR transparent	E1	BSC.5.025.4.00
BSC 32 E	NBR black	E4	BSC.5.032.1.00
BSC 32 E	NBR grey	E4	BSC.5.032.2.00
BSC 32 E	SIR transparent	E4	BSC.5.032.4.00
BSC 42 E	NBR black	E4	BSC.5.042.1.00
BSC 42 E	NBR grey	E4	BSC.5.042.2.00
BSC 42 E	SIR transparent	E4	BSC.5.042.4.00
BSC 50 E	NBR black	E5	BSC.5.050.1.00
BSC 50 E	NBR grey	E5	BSC.5.050.2.00
BSC 50 E	SIR transparent	E5	BSC.5.050.4.00
BSC 53 E	NBR black	E4	BSC.5.053.1.00
BSC 53 E	NBR grey	E4	BSC.5.053.2.00
BSC 53 E	SIR transparent	E4	BSC.5.053.4.00
BSC 62 E	NBR black	E4	BSC.5.062.1.00
BSC 62 E	NBR grey	E4	BSC.5.062.2.00
BSC 62 E	SIR transparent	E4	BSC.5.062.4.00
BSC 85 E	NBR black	E5	BSC.5.085.1.00
BSC 85 E	NBR grey	E5	BSC.5.085.2.00
BSC 88 E	NBR black	E5	BSC.5.088.5.00
BSC 88 E	NBR grey	E5	BSC.5.088.2.00
BSC 88 E	SIR transparent	E5	BSC.5.088.4.00

General information



- bellow suction cup with 3.5 folds and medium-length sealing lip
- Diameter: 14 mm, 26 mm and 62 mm
- seal is pulled over the connection nipple and held in place by internal stress

Technical drawing

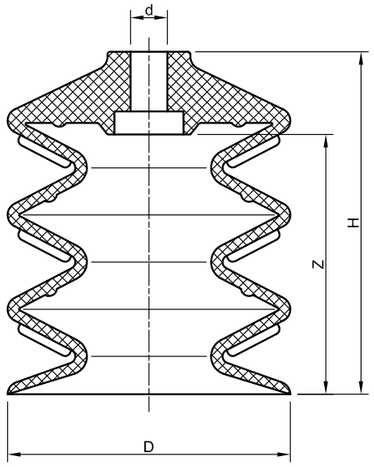

Example use



Technical data / Order data

Type	Material	D	d	H	Z	Weight (kg)	Carrying capacity* (kg)		Connection nipple group	Article number
							vertical	horizontal		
BSC 14 F	SIR transparent	14,0	4,5	30,0	21,0	0,001	0,410	0,810	E1	BSC.7.014.4.00
BSC 26 F	SIR red	25,5	4,5	45,0	33,0	0,005	1,270	2,540	E1	BSC.7.026.3.00
BSC 62 F	NBR black	61,5	8,0	74,5	56,5	0,073	8,000	17,000	E4	BSC.7.062.1.00
BSC 62 F	NBR white	61,5	8,0	74,5	56,5	0,073	8,000	17,000	E4	BSC.7.062.2.00
BSC 62 F	SIR transparent	61,5	8,0	74,5	56,5	0,073	8,000	17,000	E4	BSC.7.062.4.00

*) see page 8

General information

- bellow suction cup with 2.5 folds for heavily structured surfaces
- Diameter: 89 mm
- bonded sealing ring from special chloroprene on the underside of the bellow suction cup
- seal is pulled over the connection nipple and held in place by internal stress



Technical drawing

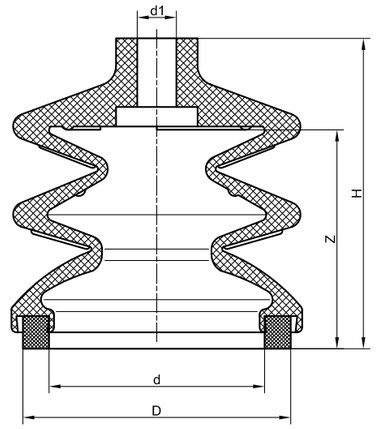

Technical data / Order data

Type	Material	D	d	d1	H	Z	Weight (kg)	Carrying capacity* (kg)		Connection nipple group	Article number
								vertical	horizontal		
BSC 89 SCP	NBR black	82	66	12	95	67	0,178	13,00	26,00	E5	BSC.3.089.111.01

*) see page 8

General information



- bellow suction cup with 1.5 folds and closed sealing surface for suction with smooth surfaces (paper, film)
- Diameter: 82 mm

Technical drawing

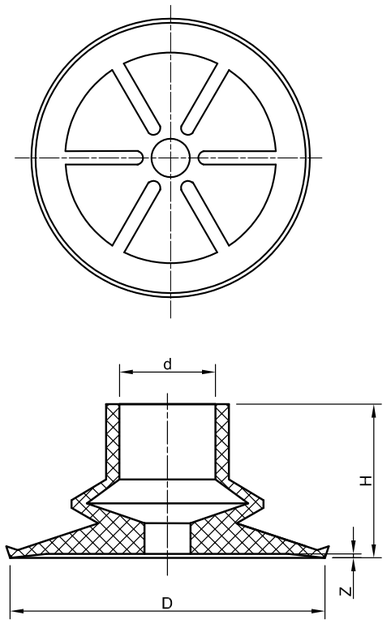

Example use



Technical data / Order data

Type	D	d	H	Z	Weight (kg)	Carrying capacity* (kg)	
						vertical	horizontal
BSC 82 L	82	25	40	1	0,042	14,00	28,00
BSC 82 L - 33	82	25	33	1	0,038	14,00	28,00

*) see page 8

Type	Material	Article number
		Bellow suction cup seal
BSC 82 L	NBR black	BSC.16.082.1.00
BSC 82 L	SIR red	BSC.16.082.3.00
BSC 82 L - 33	SIR red	BSC.16.082.3.01

General information

- bellow suction cup with 1.5 folds and long sealing lip for smooth surfaces
- Diameter: 70 mm
- seal is pulled over the connection nipple and held in place by internal stress



Technical drawing

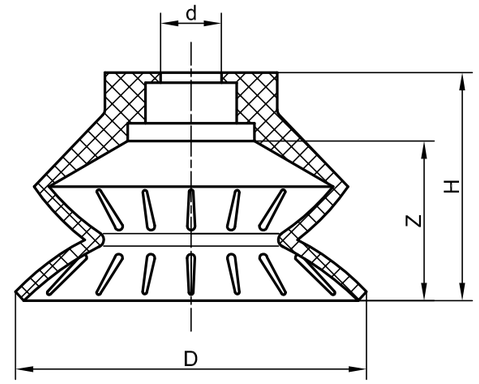

Technical data / Order data

Type	D	d	H	Z	Weight (kg)	Carrying capacity* (kg)	
						vertical	horizontal
BSC 70 CA	70	12	45	31,5	0,038	10,00	20,00

*) see page 8

Type	Material	Connection nipple group	Article number
			Bellow suction cup seal
BSC 70 CA	NBR black	W070	BSC.0.071.1.00
BSC 70 CA	SIR transparent	W070	BSC.0.071.4.00

Type BSC 50 FL

General information



- bellow suction cup with 2.5 folds, long sealing lip and closed sealing surface for suction with smooth surfaces (paper and film)
- Diameter: 50 mm
- replaceable seal (held on the base plate by internal stress)
- aluminium base plate
- different base plates available

Example use



Technical drawing

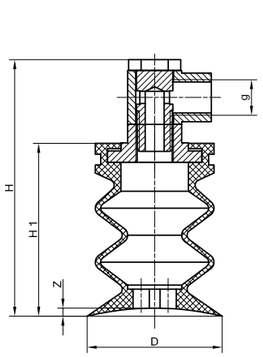

disengageable

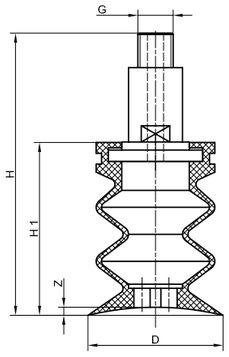

not disengageable

Technical data / Order data

Type	D	G	g	H	H1	Z	Weight (kg)	Carrying capacity* (kg)	
								vertical	horizontal
BSC 50 FL, disengageable	50	-	1/4“	95,0	64	3	0,070	5,00	11,00
BSC 50 FL, not disengageable	50	1/4“	-	104,5	64	3	0,093	5,00	11,00
BSC 50 FL, M16	50	M16	1/8“	112,2	64	3	0,069	5,00	11,00
BSC 50 FL, M10 x 1,25	50	-	M10 x 1,25	75,2	64	3	0,051	5,00	11,00

*) see page 8

Type	Material	Article number				
		disengageable	not disengageable	M16	M10x1,25	Replacement seal
BSC 50 FL	NBR white	BSC.20.050.5.01	BSC.20.050.5.02	BSC.20.050.5.04	BSC.20.050.5.05	BSC.20.050.5.00
BSC 50 FL	NBR grey	BSC.20.050.2.01	BSC.20.050.2.02	BSC.20.050.2.04	BSC.20.050.2.05	BSC.20.050.2.00
BSC 50 FL	SIR transp.	BSC.20.050.4.01	BSC.20.050.4.02	BSC.20.050.4.04	BSC.20.050.4.05	BSC.20.050.4.00

Type BBSC 60 x 140

General information

- oval bellow suction cup with 1.5 folds for smooth to lightly structured surfaces
- replaceable seal (held on the base plate by internal stress)
- aluminium base plate
- drilling template available on customer request



Technical drawing

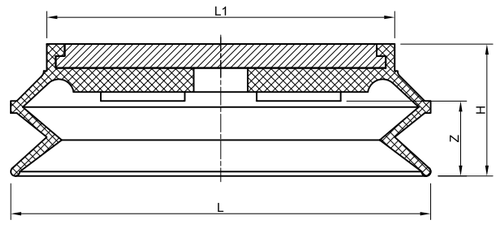

Technical data / Order data

Type	B	H	L	L1	Z	Weight (kg)	Carrying capacity* (kg)	
							vertical	horizontal
BBSC 60x140	60	44	140	116	25	0,16	13,00	27,00

*) see page 8

Type	Material	Article number	
		Bellow suction cup	Replacement seal
BBSC 60x140	NBR black	BBSC.060.140.111	BSPS.10.205
BBSC 60x140	NBR grey	BBSC.060.140.121	BSPS.10.325
BBSC 60x140	SIR transparent	BBSC.060.140.241	BSPS.10.326

General information



- bellow suction cup with 1.5 folds, short sealing lip and inner support strips
- Diameter: 110 mm and 150 mm
- with vulcanized steel ring
- aluminium base plate
- drilling template available on customer request

Technical drawing

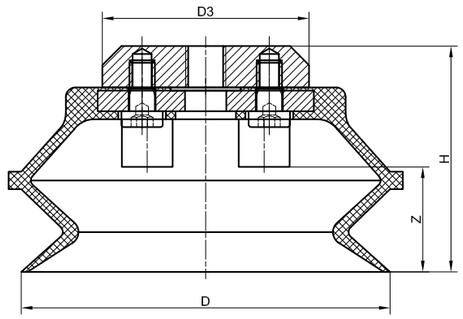

Technical data / Order data

Type	D	D3	H	Z	Weight (kg)	Carrying capacity* (kg)	
						vertical	horizontal
BBSC 110 CO	116	65	71,0	33	0,437	30,00	60,00
BBSC 150 CO	150	75	79,5	47	0,813	51,00	102,00

*) see page 8

Type	Material	Article number	
		Bellow suction cup	Replacement seal
BBSC 110 CO	NBR black	BBSC.110.111.000	BSPS.10.238
BBSC 110 CO	NBR grey	BBSC.110.121.000	BSPS.10.155
BBSC 110 CO	SIR transparent	BBSC.110.241.000	BSPS.10.156
BBSC 150 CO	NBR black	BBSC.155.111.000	BSPS.10.239
BBSC 150 CO	NBR grey	BBSC.155.121.000	BSPS.10.157
BBSC 150 CO	SIR transparent	BBSC.155.241.000	BSPS.10.158

General information

- bellow suction cup with 1.5 folds, medium-length sealing lip and inner support strips for smooth and lightly structured surfaces
- Diameter: 75 mm, 110 mm and 150 mm
- replaceable seal (clamped with clamping clip)
- aluminium base plate
- drilling template available on customer request



Technical drawing

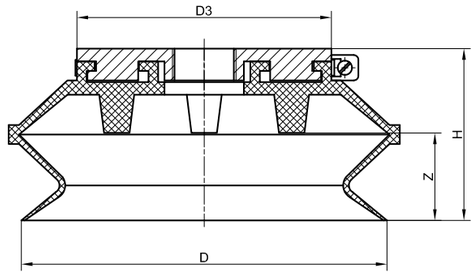

Technical data / Order data

Type	D	D3	H	Z	Weight (kg)	Carrying capacity* (kg)	
						vertical	horizontal
BBSC 75 P	82	58	40	22,75	0,081	11,00	23,00
BBSC 110 P	115	80	54	27,50	0,210	24,00	48,00
BBSC 150 P	158	110	71	41,00	0,468	50,00	101,00

*) see page 8

Type	Material	Article number	
		Bellow suction cup	Replacement seal
BBSC 75 P	NBR black	BBSC.075.111.001	BSPS.10.060
BBSC 75 P	NBR grey	BBSC.075.121.001	BSPS.10.333
BBSC 110 P	NBR black	BBSC.114.111.001	BSPS.10.061
BBSC 150 P	NBR black	BBSC.158.111.001	BSPS.10.062
BBSC 150 P	SIR transparent	BBSC.158.241.001	BSPS.10.065

General information



- bellow suction cup with 1.5 folds, medium-length sealing lip and inner support strips for smooth to lightly structured surfaces
- Diameter: 80 mm to 250 mm
- replaceable seal (clamped with clamping clip)
- aluminium base plate
- drilling template available on customer request

Technical drawing

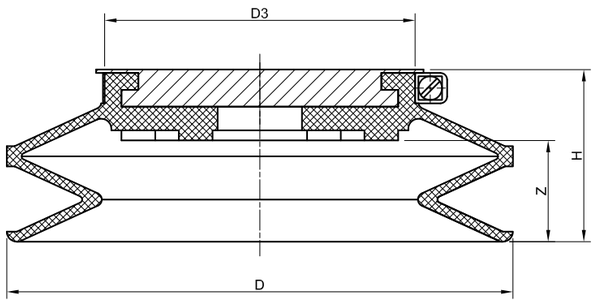

Technical data

Type	D	D3	H	Z	Weight (kg)	Carrying capacity* (kg)	
						vertical	horizontal
BBSC 80 R	80	48	39	23,5	0,088	11,00	23,00
BBSC 100 R	100	69	39	25,0	0,136	19,00	38,00
BBSC 150 R	150	92	51	30,0	0,431	47,00	94,00
BBSC 200 R	200	121	68	46,0	0,753	77,00	155,00
BBSC 250 R	250	180	70	39,0	1,868	132,00	265,00

*) see page 8

Order data

Type	Material	Article number		
		Bellow suction cup	Replacement seal	Clamping clip
BBSC 80 R	NBR black	BBSC.080.111.000	BSPS.10.313	BSPS.11.063
BBSC 80 R	NBR grey	BBSC.080.121.000	BSPS.10.314	BSPS.11.063
BBSC 80 R	SIR transparent	BBSC.080.241.000	BSPS.10.315	BSPS.11.063
BBSC 100 R	NBR black	BBSC.100.111.000	BSPS.10.316	BSPS.11.062
BBSC 100 R	NBR grey	BBSC.100.121.000	BSPS.10.317	BSPS.11.062
BBSC 100 R	SIR transparent	BBSC.100.241.000	BSPS.10.318	BSPS.11.062
BBSC 150 R	NBR black	BBSC.150.111.000	BSPS.10.222	BSPS.11.020
BBSC 150 R	NBR grey	BBSC.150.121.000	BSPS.10.151	BSPS.11.020
BBSC 150 R	SIR transparent	BBSC.150.241.000	BSPS.10.150	BSPS.11.020
BBSC 200 R	NBR black	BBSC.200.111.000	BSPS.10.211	BSPS.11.006
BBSC 200 R	NBR grey	BBSC.200.121.000	BSPS.10.123	BSPS.11.006
BBSC 200 R	SIR transparent	BBSC.200.241.000	BSPS.10.154	BSPS.11.006
BBSC 250 R	NBR black	BBSC.250.111.000	BSPS.10.221	BSPS.11.005
BBSC 250 R	NBR grey	BBSC.250.121.000	BSPS.10.108	BSPS.11.005
BBSC 250 R	SIR transparent	BBSC.250.241.000	BSPS.10.283	BSPS.11.005

Type BBSC 150 - 2,5

General information



- bellow suction cup with 2.5 folds, medium-length sealing lip and inner support strips for smooth and lightly structured surfaces
- Diameter: 150 mm
- replaceable seal (clamped with clamping clip)
- aluminium base plate
- drilling template available on customer request

Example use



Technical drawing

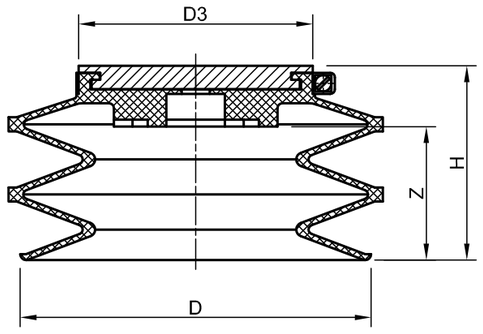

Technical data / Order data

Type	D	D3	H	Z	Weight (kg)	Carrying capacity* (kg)	
						vertical	horizontal
BBSC 150 -2,5	150	100	83	57	0,58	43,00	87,00

*) see page 8

Type	Material	Article number	
		Bellow suction cup	Replacement seal
BBSC 150 -2,5	NBR grey	BBSC.153.121.000	BSPS.10.148
BBSC 150 -2,5	SIR transparent	BBSC.153.241.000	BSPS.10.149

Type BBSC 150 CO - 3,5

General information

- bellow suction cup with 3.5 folds, short sealing lip and inner support strips
- Diameter: 150 mm
- with vulcanized steel ring
- aluminium base plate
- drilling template available on customer request



Technical drawing

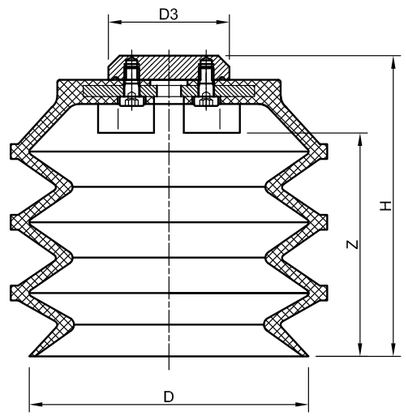

Example use

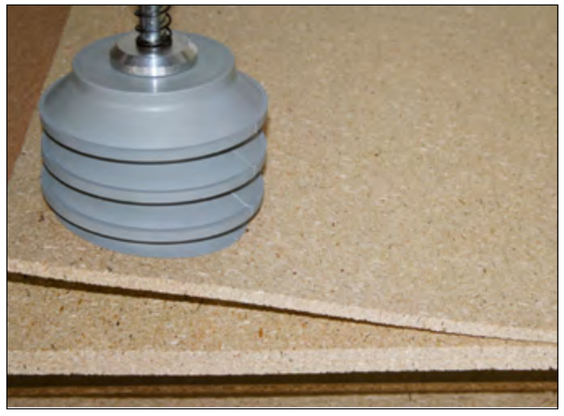

Technical data / Order data

Type	D	D3	H	Z	Weight (kg)	Carrying capacity* (kg)	
						vertical	horizontal
BBSC 150 CO	150	65	161,5	120	0,11	45,00	91,00

*) see page 8

Type	Material	Article number	
		Bellow suction cup	Replacement seal
BBSC 150 CO	NBR grey	BBSC.156.121.000	BSPS.10.463
BBSC 150 CO	SIR transparent	BBSC.156.241.000	BSPS.10.614

04 Vacuum generators

Ejectors 108

Ejectors series piINLINE 108

Ejectors series piCLASSIC 110

Ejectors series V 111

Ejectors series AV 112

Ejectors series piSECURE 113

Vacuum pumps 114

Vacuum pumps series VT, KVT, dry-running 114

Vacuum pumps series U, lubricated with circulating oil 116

Side channel blower / Fan 118

Side channel blower series BSKV, single-stage 118

Side channel blower series BSKV, double-stage 120

Vacuum pumps with reservoir 122

Vacuum pump with reservoir series BEE 122

Pneumatic vacuum pump with reservoir type PVE 123

www.euro-tech-vacuum.com 107

General information



- patented COAX® cartridge technology
- a high suction air rate in terms of energy consumption
- lightweight, inline design with connection for vacuum and compressed air
- quick and easy installation, directly onto the hose
- Si cartridge with high suction volume
- Xi cartridge with high final vacuum

Example use

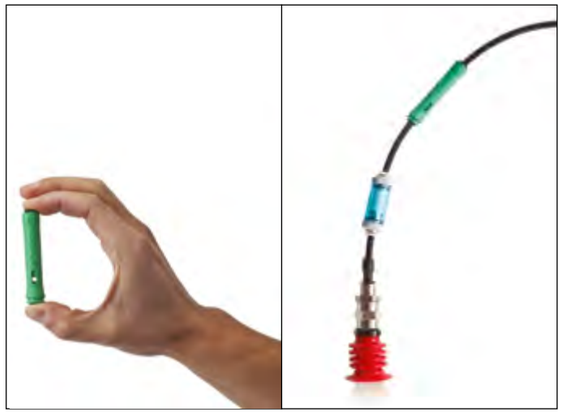

Technical drawing

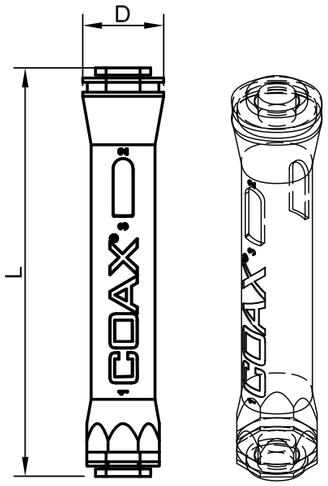

Technical data

Type	Cartridge	L	D	Weight (kg)	Vacuum connection	Compressed air connection
Micro	Si	71	15	0,010	6	6
Micro	Xi	71	15	0,010	6	6
Mini	Si	96	19	0,023	8	8
Mini	Xi	96	19	0,023	8	8
Midi	Si	154	28	0,087	12	8
Midi	Xi	154	28	0,087	12	8

3D drawing



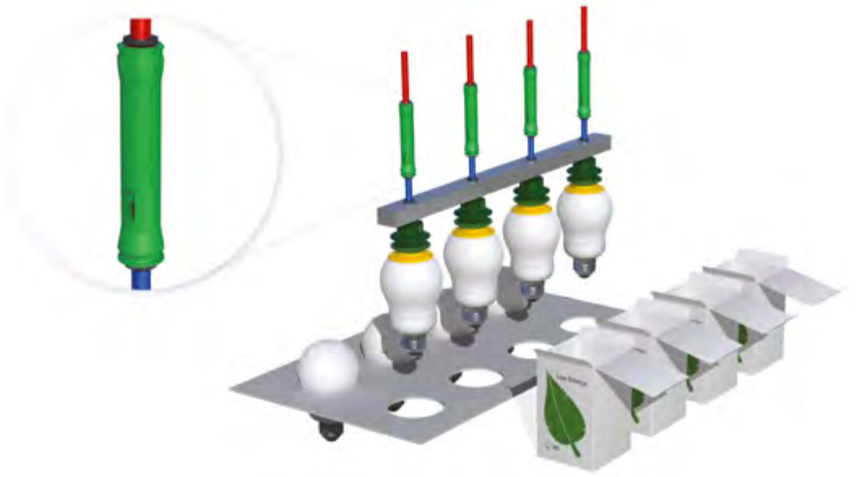

Performance data / Order data

Type	Cartridge	Air consumption (l / min)	Suction volume (l / min)	Final vacuum	Feed pressure (bar)	Article number
Micro	Si	7,20	16,8	75	6	EJ-MICRO-SI6-6
Micro	Xi	7,80	14,4	92	5	EJ-MICRO-XI6-6
Mini	Si	26,4	41,4	75	6	EJ-MINI-SI8-8
Mini	Xi	24	37,2	94	5	EJ-MINI-XI8-8
Midi	Si	105	186	75	6	EJ-MIDI-SI8-12
Midi	Xi	109,8	168	95	4,5	EJ-MIDI-XI8-12

General information



- patented COAX® cartridge technology
- a high suction air rate in terms of energy consumption
- Si cartridge with high suction volume
- Xi cartridge with high final vacuum
- lightweight, configurable and modular design
- easy disassembly for maintenance
- feed pressure 4,5-7 bar

3D drawing



Technical data

Typ	Cartridge	L	H	Weight (kg)	Air consumption (l / min)	Flow rate (l / min)	Final vacuum	Vacuum connection	Compressed air connection	Article number
Si32-3	Si32-3 x1	193	45	0,50	105	360	75	G1"	G1/4"	piClassicSi32-3x1
Si32-3	Si32-3 x2	193	45	0,55	210	720	75	G1"	G1/4"	piClassicSi32-3x2
Si32-3	Si32-3 x3	193	70	0,72	315	1080	75	G1"	G1/4"	piClassicSi32-3x3
Si32-3	Si32-3 x4	193	70	0,79	420	1440	75	G1"	G1/4"	piClassicSi32-3x4
Si32-3	Si32-3 x5	193	95	0,80	525	1530	75	G1"	G1/4"	piClassicSi32-3x5
Si32-3	Si32-3 x6	193	95	0,88	630	1728	75	G1"	G1/4"	piClassicSi32-3x6
Xi40-3	Xi40-3 x1	193	45	0,50	109,8	354	95	G1"	G1/4"	piClassicXi-3-3x1
Xi40-3	Xi40-3 x2	193	45	0,55	219,6	708	95	G1"	G1/4"	piClassicXi-3-3x2
Xi40-3	Xi40-3 x3	193	70	0,72	329,4	1062	95	G1"	G1/4"	piClassicXi-3-3x3
Xi40-3	Xi40-3 x4	193	70	0,79	439,2	1416	95	G1"	G1/4"	piClassicXi-3-3x4
Xi40-3	Xi40-3 x5	193	95	0,80	549	1506	95	G1"	G1/4"	piClassicXi-3-3x5
Xi40-3	Xi40-3 x6	193	95	0,88	660	1698	95	G1"	G1/4"	piClassicXi-3-3x6

Technical drawing

- multi-stage ejector for vacuum generation with compressed air
- various sizes available
- model available with high flow rate or with high final vacuum
- aluminium housing
- feed pressure 4-6 bar



Technical drawing

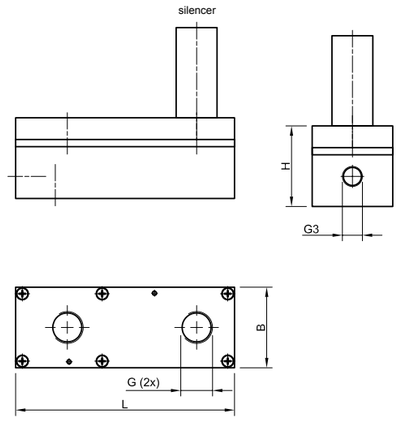

Example use

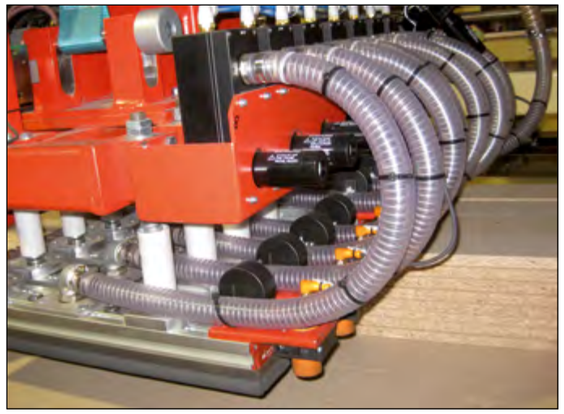

Performance data / Order data

Type	L	B	H	G	G3	Weight (kg)	Air consumption (l / min)	Flow rate (l / min)	Final vacuum	Sound level (dB(A))	Pressure (bar)	Article number
VILP-12-900	182	67	67,0	3/4"	3/8"	1,40	270,0	900	90 %	60-65	6,00	EJ-VILP.012.0900
VIP 16	250	97	72,0	1 "	3/8"	2,50	240,0	900	90 %	75	4,00	EJ-VIP.16.000
VIP 32	250	97	90,0	1 1/2"	3/8"	3,50	500,0	1580	90 %	75	4,00	EJ-VIP.32.000
VIP 48	250	97	111,0	1 1/2"	3/8"	3,90	750,0	2400	90 %	75	4,00	EJ-VIP.48.000
VLP-12-750	182	67	67,0	3/4"	3/8"	1,39	240,0	750	70 %	60-65	6,00	EJ-VLP.012.0750
VLP-16-1050	250	97	72,0	1 1/2"	3/8"	2,50	250,0	1050	70 %	75	6,00	EJ-VLP.16.1050
VLP-32-2100	250	97	90,0	1 1/2"	3/8"	2,80	500,0	2100	70 %	75	6,00	EJ-VLP.32.2100
VLP-48-3200	250	97	111,0	1 1/2"	3/8"	3,20	950,0	3200	70 %	72	6,00	EJ-VLP.48.3200
VSL-40 P	65	59	44,0	3/8"	1/8"	0,46	450,0	922	90 %	65	6,00	EJ-VSL.40P.0900
VSM-36-500	67	59	28,5	3/8"	1/8"	0,28	235,2	500	90 %	65	6,00	EJ-VSM.36.0500

General information



- single-stage ejector for vacuum generation with compressed air
- various sizes available
- integrated non return valve
- high flow rate and high final vacuum
- aluminium housing
- feed pressure 4-6 bar

Technical drawing

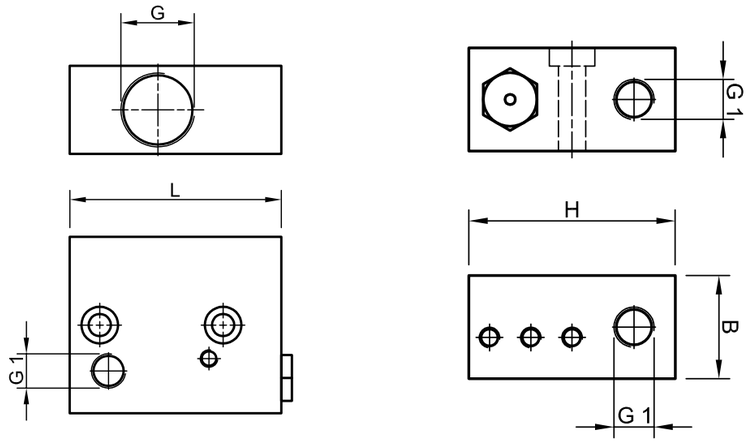

Technical data / Performance data / Order data

Type	L	B	H	G	G1	Weight (kg)
AV 2BV-20	60	25	50	1/2"	1/4“	0,180
AV 2BV-30	60	25	50	1/2"	1/4“	0,185
AV 2BV-40	60	25	50	1/2"	1/4“	0,190
AV 2BV-60	60	25	50	1/2"	1/4“	0,195

Type	Air consumption (l / min)	Suction volume (l / min)	Final vacuum	Article number
AV 2BV-20	20	25	85 %	EJ-AV2-BV20
AV 2BV-30	30	34	85 %	EJ-AV2-BV30
AV 2BV-40	37	40	85 %	EJ-AV2-BV40
AV 2BV-60	60	60	85 %	EJ-AV2-BV60

General information

- double-stage ejector for vacuum generation with compressed air
- with blow-off function
- integrated non return valve
- high flow rate and high final vacuum
- aluminium housing
- feed pressure 4.5-6 bar



Technical drawing

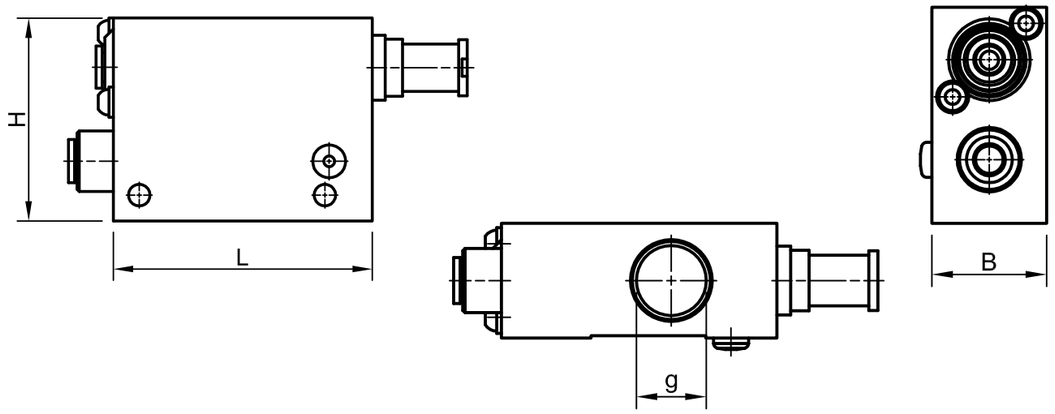

Technical data / Performance data / Order data

Type	L	B	H	g	Weight (kg)
piSECURE x10-2	60	25	47	3/8"	0,225

Type	Air consumption (l / min)	Suction volume (l / min)	Final vacuum	Article number
piSECURE x10-2	32,4	45	94 %	EJ-SECUREx10-2

General information



- dry-running rotary-vane vacuum pump
- suitable for continuous operation
- high final vacuum (>80%)
- low maintenance
- spare parts available

Performance data

Type	Max. power (kW)	Suction volume (m^3/h)	Max. final vacuum (mbar)	Voltage (V)		Current (A)	
	50/60 Hz	50/60 Hz	50/60 Hz	50 Hz	60 Hz	50 Hz	60 Hz
VT 4.4 (3~)	0,18/0,21	4,1/4,7	150/150	175-260/300-450	202-300/350-520	1,8/0,62	1,8/0,62
VT 4.4 (1~)	0,18/0,21	4,1/4,7	150/150	230 ± 10 %	230 ± 10 %	1,65	1,65
VT 4.8 (3~)	0,37/0,44	8,0/9,1	150/150	175-260/300-450	202-300/350-520	2,35/1,35	2,40/1,40
VT 4.8 (1~)	0,35/0,42	8,0/9,1	150/150	230 ± 10 %	230 ± 10 %	3,90	3,40
VT 4.10 (3~)	0,37/0,45	10,0/12,0	150/150	175-260/300-450	202-300/350-520	2,30/1,30	2,35/1,36
VT 4.10 (1~)	0,37/0,45	10,0/12,0	150/150	230 ± 10 %	230 ± 10 %	3,0	3,4
VT 4.16 (3~)	0,55/0,70	16,0/19,0	150/150	175-260/300-450	202-300/350-520	3,80/2,20	3,90/2,25
VT 4.16 (1~)	0,55/0,70	16,0/19,0	150/150	230 ± 10 %	230 ± 10 %	4,6	5,2
VT 4.25 (3~)	0,75/0,90	25,0/30,0	150/150	175-254/300-440	190-300/330-520	6,00/3,5	6,00/3,5
VT 4.40 (3~)	1,25/1,50	40,0/48,0	150/150	190-254/330-440	190-290/330-500	6,90/4,00	6,90/4,00
KVT 3.60 (3~)	2,40/3,00	55,0/66,0	100/100	190-254/330-440	190-288/330-400	10,6-11,4/6,1-6,6	12,6-10,6/7,3-6,1
KVT 3.80 (3~)	2,40/3,00	67,0/78,5	100/100	190-254/330-440	190-288/330-400	10,6-11,4/6,1-6,6	12,6-10,6/7,3-6,1
KVT 3.100 (3~)	3,00/3,50	98,0/112	100/100	190-254/330-440	190-288/330-400	13,0/13,6/7,5-7,9	15,5-12,4/8,9-7,2
KVT 3.140 (3~)	4,00/4,80	129/154	100/100	190-254/330-440	190-288/330-400	17,2-21,9/9,9-12,7	20,5-19,0/11,8-11,0
VX 4.10 (3~)	0,37/0,45	10,0/12,0	150/150	175-260/300-450	202-300/350-520	2,30/1,30	2,35/1,36
VX 4.16 (3~)	0,55/0,70	16,0/19,0	150/150	175-260/300-450	202-300/350-520	3,80/2,20	3,90/2,25
VX 4.25 (3~)	0,75/0,90	25,0/30,0	150/150	175-254/300-440	190-300/330-520	6,00/3,5	6,00/3,5
VX 4.40 (3~)	1,25/1,50	40,0/48,0	150/150	190-254/330-440	190-290/330-500	6,90/4,00	6,90/4,00
KVX 3.60 (3~)	2,4/3,0	55,0/66,0	100/100	190-254/330-440	190-288/330-400	10,6-11,4/6,1-6,6	12,6-10,6/7,3-6,1
KVX 3.80 (3~)	2,4/3,0	67,0/78,5	100/100	190-254/330-440	190-288/330-400	10,6-11,4/6,1-6,6	12,6-10,6/7,3-6,1
KVX 3.100 (3~)	3,0/3,5	98,0/112	100/100	190-254/330-440	190-288/330-400	13,0/13,6/7,5-7,9	15,5-12,4/8,9-7,2
KVX 3.140 (3~)	4,0/4,8	129/154	100/100	190-254/330-440	190-288/330-400	17,2-21,9/9,9-12,7	20,5-19,0/11,8-11,0

Technical drawing

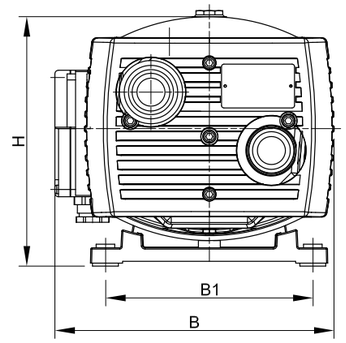

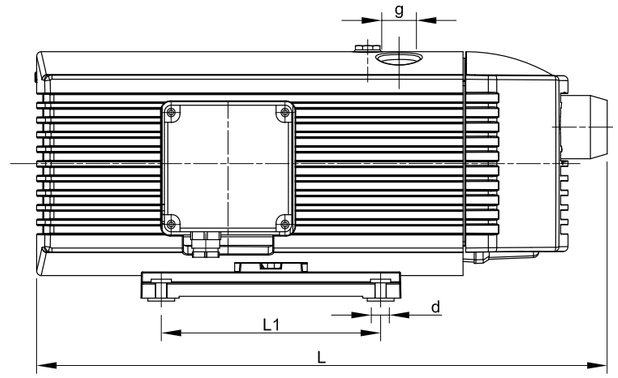

Technical data / Order data

Type	L	L1	B	B1	H	d	g	Sound level (dB(A))	Weight (kg)	Article number
VT 4.4 (3~)	221,5	100	116	80	148	7	1/4"	59/61	7,0	G009361
VT 4.4 (1~)	221,5	100	116	80	148	7	1/4"	59/61	7,0	G009375
VT 4.8 (3~)	231	100	116	80	154	7	3/8"	58/61	11,5	G010996
VT 4.8 (1~)	251	100	116	80	154	7	3/8"	58/61	11,5	G009383
VT 4.10 (3~)	429	112	206	160	189	7	1/2"	60/62	16,0	G008380
VT 4.10 (1~)	429	112	206	160	189	7	1/2"	60/62	16,0	G008380.01
VT 4.16 (3~)	452	125	231	202	205	7	1/2"	61/64	22,5	G008163
VT 4.16 (1~)	452	125	231	202	205	7	1/2"	61/64	22,5	G008163.02
VT 4.25 (3~)	505	208	260	220	253	7	3/4"	62/67	26,0	G007775
VT 4.40 (3~)	572	208	280	220	253	7	3/4"	67/72	38,5	G007623
KVT 3.60 (3~)	709	190	363	326	312	12	1"	71/73	69	G008821
KVT 3.80 (3~)	709	190	363	326	312	12	1"	72/75	69	G006679
KVT 3.100 (3~)	835	245	470	398	330	12	1 1/2"	75/77	101	G0066100
KVT 3.140 (3~)	873	245	470	398	330	12	1 1/2"	76/79	111	G007226
VX 4.10 (3~)	429	112	206	160	189	7	1/2"	60/62	16,0	G013531
VX 4.16 (3~)	452	125	231	202	205	7	1/2"	61/64	22,5	G013533
VX 4.25 (3~)	505	208	260	220	253	7	3/4"	62/67	26,0	G013632
VX 4.40 (3~)	572	208	280	220	253	7	3/4"	67/72	38,5	G013535
KVX 3.60 (3~)	709	190	363	326	312	12	1"	71/73	69	G014074
KVX 3.80 (3~)	709	190	363	326	312	12	1"	72/75	69	G014075
KVX 3.100 (3~)	835	245	470	398	330	12	1 1/2"	75/77	101	G014076
KVX 3.140 (3~)	873	245	470	398	330	12	1 1/2"	76/79	111	G013783

General information



- rotary-vane vacuum pump lubricated with circulating oil
- suitable for continuous operation
- very high final vacuum (>97%)
- low maintenance
- spare parts available

Technical drawing

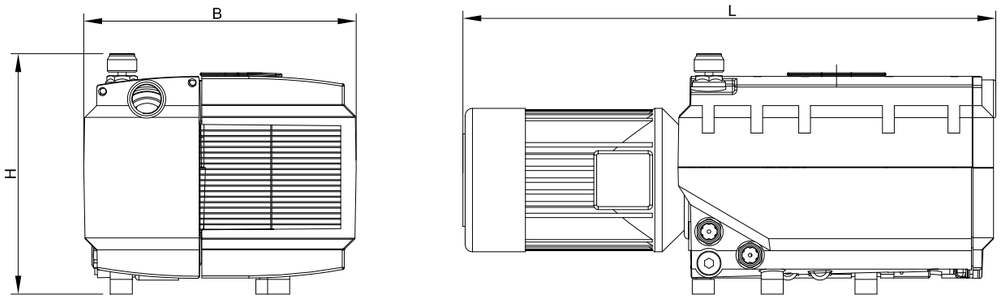

Performance data

Type	Max. power (kW)	Suction volume (m^3/h)	Max. final vacuum (mbar)	Voltage (V)		Current (A)	
	50/60 Hz	50/60 Hz	50/60 Hz	50 Hz	60 Hz	50 Hz	60 Hz
U 4.20 (3~)	0,55/0,66	18/21	<1,0/<1,5	190-260/330-450	225-300/390-520	3,3/1,95	3,3/1,95
U 4.20 (1~)	0,60/0,72	18/21	<1,0/<1,5	230 ± 10%	230 ± 10%	6,4	5,9
U 4.40 (3~)	1,50/1,80	41/48	0,5/0,5	190-254/330-440	190-290/330-500	6,2-6,9/3,6-4,0	7,3-6,2/4,2-3,6
U 4.40 (1~)	1,5/1,8	41/48	0,5/0,5	220-240	220-240	10,5	12,3
U 4.70 SA (3~)	2,4/3,0	63/74	3/0,5	190-254/330-440	190-288/330-500	10,6-11,4/6,1-6,6	12,6-10,6/7,3-6,1
U 4.100 SA (3~)	2,4/3,0	100/117	3/0,5	190-254/330-440	190-288/330-500	10,6-11,4/6,1-6,6	12,6-10,6/7,3-6,1
U 4.165 SA (3~)	4,0/4,8	162/190	3/0,5	190-254/330-440	190-288/330-500	17,2-21,9/9,9-12,7	20,5-19,0/11,8-11,0
U 4.195 SA (3~)	5,5/6,4	190/223	3/0,5	340-430/588-745	340-500/588-866	12,8-15,0/7,4-8,7	14,2-13,3/8,2-7,7

Example use



Technical data / Order data

Type	L	B	H	Suction connection (g)	Sound level (dB(A))	Weight (kg)	Article number
U 4.20 (3~)	334	308	227	1/2"	63,0/67,0	20	G009865
U 4.20 (1~)	334	308	227	1/2"	63,0/67,0	20	G009865.01
U 4.40 (3~)	462	331	268	1"	69,0/71,0	38	G000553
U 4.40 (1~)	462	331	268	1"	69,0/71,0	38	G000553.01
U 4.70 SA (3~)	725	374	280	1 1/4	67,0/68,5	62	G006320
U 4.100 SA (3~)	780	374	280	1 1/4	67,0/68,5	65	G006308
U 4.165 SA (3~)	900	531	355	2"	71,0/74,0	129	G997414
U 4.195 SA (3~)	998	531	355	2"	73,0/76,0	163	G009035

General information



- single-stage model
- high flow rate
- very low vibration
- long service life thanks to lifetime-lubricated bearing
- medium final vacuum
- also available as a complete construction unit with assembled change-over valve, suction limitation and vacuum filter

Performance data

Type	Max. power (kW)	Suction volume (m^3/h)	Max. final vacuum (mbar)	Voltage (V)		Current (A)	
	50/60 Hz	50/60 Hz	50/60 Hz	50 Hz	60 Hz	50 Hz	60 Hz
SV 200/1	1,5/1,8	180/230	215/230	Δ 230/Y 400 IE2	Δ 230/Y 400 IE2	5,77/3,3	5,77/3,3
SV 201/2	1,5/1,9	190/230	220/210	Δ 230/Y 400 IE2	Δ 230/Y 400 IE2	5,77/3,3	5,77/3,3
SV 300/1	3,0/3,6	335/405	265/245	220-240/380-420	254-277/440-480	11,0/6,35	11,0/6,35
SV 400/1	4,0/4,8	440/520	285/265	230/400 ± 10 %	265/460 ± 10%	15,2/8,7	14,6/8,4
DG 100-16	0,18/0,2	60/72	50/70	220- 240Δ/345-415Y	220-275Δ/380-480Y	1,2Δ/0,69Y	0,90Δ/0,50Y
DG 200-16	0,4/0,5	90/108	110/140	220- 240Δ/345-415Y	220-275Δ/380-480Y	2,2Δ/1,30Y	2,3Δ/1,30Y
DG 300-16	0,75/0,85	90/108	140/140	220- 240Δ/345-415Y	220-275Δ/380-480Y	2,2Δ/1,30Y	2,3Δ/1,30Y
DG 300-26	0,9/1,1	156/186	165/180	220- 240Δ/345-415Y	220-275Δ/380-480Y	3,70Δ/2,14Y	4,50Δ/2,60Y
DG 300-36	1,3/1,5	156/186	175/205	220- 240Δ/345-415Y	220-275Δ/380-480Y	4,20Δ/2,40Y	5,25Δ/3,00Y
DG 400-16	0,9/1,1	222/264	130/120	220- 240Δ/345-415Y	220-275Δ/380-480Y	4,60Δ/2,65Y	4,50Δ/2,60Y
DG 400-26	1,3/1,5	222/264	180/170	220- 240Δ/345-415Y	220-275Δ/380-480Y	5,70Δ/3,30Y	6,00Δ/3,50Y
DG 400-36	1,75/1,9	222/264	210/200	220- 240Δ/345-415Y	220-275Δ/380-480Y	6,70Δ/3,90Y	7,00Δ/4,00Y
DG 400-46	2,2/2,6	222/264	220/255	220- 240Δ/345-415Y	220-275Δ/380-480Y	7,80Δ/4,50Y	9,50Δ/5,50Y
DG 600-16	2,2/2,6	330/390	220/220	220- 240Δ/345-415Y	220-275Δ/380-480Y	9,70Δ/5,60Y	10,70Δ/6,20Y
DG 600-26	3,4/3,7	330/390	255/280	220- 240Δ/345-415Y	220-275Δ/380-480Y	12,5Δ/7,20Y	13,5Δ/7,80Y
DG 600-36	4/4,6	330/390	270/315	220- 240Δ/345-415Y	220-275Δ/380-480Y	14,3Δ/8,20Y	16,2Δ/9,30Y
DG 800-16	5,5/6,3	570/678	270/290	220- 240Δ/345-415Y	220-275Δ/380-480Y	25,3Δ/14,6Y	29,5Δ/17,0Y
DG 800-26	7,5/8,6	570/678	295/350	220- 240Δ/345-415Y	220-275Δ/380-480Y	31,5Δ/18,2Y	37,0Δ/21,3Y
DG 900-16	9,0/11,0	1134/1344	200/180	220- 240Δ/345-415Y	220-275Δ/380-480Y	36,0Δ/20,8Y	37,0Δ/21,4Y
DG 900-26	13,0/15,0	1134/1344	290/280	220- 240Δ/345-415Y	220-275Δ/380-480Y	46,8Δ/27,0Y	51,5Δ/29,8Y
DG 900-36	20,0/22,0	1134/1344	350/365	220- 240Δ/345-415Y	220-275Δ/380-480Y	66,7Δ/38,6Y	76,0Δ/44,0Y

Technical drawing

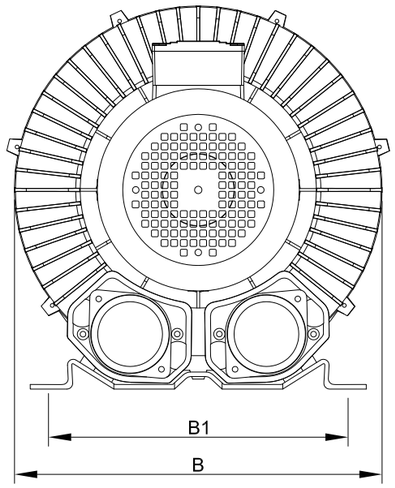

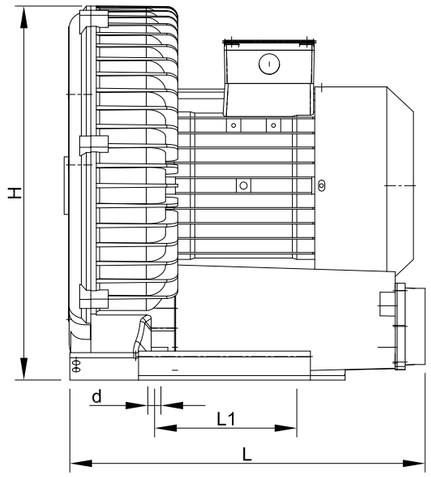

Technical data / Order data

Type	L	L1	B	B1	H	d	Suction connection (g)	Sound level (dB(A))	Weight (kg)	Article number
SV 200/1	411	240	306	240	357	10,2	2"	63,9/69,2	26,5	BSKV-SV.200.1.000
SV 201/2	411	240	306	240	357	10,2	2"	63,9/69,3	27,5	BSKV-SV.201.1.000
SV 300/1	469	361	370	290	426	10,2	2,5"	70/71	40,00	BSKV-SV.300.1.000
SV 400/1	472	310	390	310	454	12	3"	76,1/75,3	49,00	BSKV-SV.400.1.000
DG 100-16	200	80	220	165	213	12	1"	52/55	6,50	BSKV-DG.0100.16.00
DG 200-16	226	83	248	205	245	12	1 1/4"	58/61	11,00	BSKV-DG.0200.16.00
DG 300-16	240	95	285	225	302	12	1 1/2"	64/63	14,00	BSKV-DG.0300.16.00
DG 300-26	240	95	285	225	302	12	1 1/2"	64/63	15,00	BSKV-DG.0300.26.00
DG 300-36	240	95	285	225	302	12	1 1/2"	64/63	16,00	BSKV-DG.0300.36.00
DG 400-16	298	115	333	260	338	14	2"	73/70	20,50	BSKV-DG.0400.16.00
DG 400-26	298	115	333	260	338	14	2°	73/70	22,00	BSKV-DG.0400.26.00
DG 400-36	298	115	333	260	338	14	2"	73/70	23,00	BSKV-DG.0400.36.00
DG 400-46	298	115	333	260	338	14	2"	73/70	26,00	BSKV-DG.0400.46.00
DG 600-16	333	140	381	290	415	15	2"	77/72	32,00	BSKV-DG.0600.16.00
DG 600-26	333	140	381	290	415	15	2°	77/72	34,00	BSKV-DG.0600.26.00
DG 600-36	333	140	381	290	415	15	2"	77/72	37,00	BSKV-DG.0600.36.00
DG 800-16	455	280	460	365	550	16	2 1/2"	79/74	77,00	BSKV-DG.0800.16.00
DG 800-26	455	280	460	365	550	16	2 1/2"	79/74	88,00	BSKV-DG.0800.26.00
DG 900-16	672	600	557	360	630	16	4"	81/76	100,00	BSKV-DG.0900.16.00
DG 900-26	672	600	557	360	630	16	4"	81/76	112,00	BSKV-DG.0900.26.00
DG 900-36	672	600	557	360	630	16	4"	81/76	159,00	BSKV-DG.0900.36.00

General information



- double-stage model
- high flow rate
- high final vacuum
- very low vibration
- long service life thanks to lifetime-lubricated bearing
- also available as a complete construction unit with assembled change-over valve, suction limitation and vacuum filter

Performance data

Type	Max. power (kW)	Suction volume (m³/h)	Max. Final vacuum (mbar)	Voltage (V)		Current (A)	
	50/60 Hz	50/60 Hz	50/60 Hz	50 Hz	60 Hz	50 Hz	60 Hz
SV 200/2	1,5/1,8	90/110	330/350	Δ 230/ Y 400 IE2	Δ 265/ Y 460 IE2	5,7/3,3	5,7/3,3
SV 201/3	1,5/1,9	90/111	400/400	Δ 230/ Y 400 IE3	Δ 265/ Y 460 IE3	5,7/3,3	5,7/3,3
SV 300/2	3,0/3,6	165/200	405/410	220-240/380-420	254-277/440-480	11,0/6,35	11,0/6,35
SV 400/2	4,0/4,8	210/255	400/400	230/400 ± 10%	265/460 ± 10%	15,2/8,7	14,6/8,4
DG 230-16	0,75/0,85	96/108	200/245	200- 240Δ/345-415Y	220- 275Δ/380-480Y	3,70Δ/2,14Y	3,90Δ/2,25Y
DG 330-16	1,75/1,9	156/186	275/300	200- 240Δ/345-415Y	220- 275Δ/380-480Y	6,70Δ/3,90Y	7,00Δ/4,00Y
DG 330-26	2,2/2,2	156/186	320/350	200- 240Δ/345-415Y	220- 275Δ/380-480Y	7,80Δ/4,50Y	9,5Δ/5,50Y
DG 430-16	3,4/3,7	222/264	345/370	200- 240Δ/345-415Y	220- 275Δ/380-480Y	12,5Δ/7,20Y	13,5Δ/7,80Y
DG 430-26	4,0/4,6	222/264	355/410	200- 240Δ/345-415Y	220- 275Δ/380-480Y	14,3Δ/8,20Y	16,2Δ/9,30Y
DG 630-26	4,0/4,6	330/360	350/350	200- 240Δ/345-415Y	220- 275Δ/380-480Y	14,3Δ/8,20Y	16,2Δ/9,30Y
DG 630-36	5,5/6,3	330/360	410/420	200- 240Δ/345-415Y	220- 275Δ/380-480Y	21,6Δ/12,5Y	26,5Δ/13,5Y
DG 630-46	7,5/8,6	330/360	420/450	200- 240Δ/345-415Y	220- 275Δ/380-480Y	31,5Δ/18,2Y	37,0Δ/21,3Y
DG 640-36	5,5/6,3	474/570	200/180	200- 240Δ/345-415Y	220- 275Δ/380-480Y	25,3Δ/14,6Y	29,5Δ/17,0Y
DG 640-46	7,5/8,6	474/570	240/260	200- 240Δ/345-415Y	220- 275Δ/380-480Y	31,5Δ/18,2Y	37,0Δ/21,3Y
DG 830-16	7,5/8,6	570/678	350/290	200- 240Δ/345-415Y	220- 275Δ/380-480Y	31,5Δ/18,2Y	37,0Δ/21,3Y
DG 830-26	13/15	570/678	430/450	200- 240Δ/345-415Y	220- 275Δ/380-480Y	46,8Δ/27,0Y	52,0Δ/30,0Y
DG 830-36	20/22	570/678	450/470	200- 240Δ/345-415Y	220- 275Δ/380-480Y	66,7Δ/38,6Y	76,0Δ/44,0Y
DG 840-16	7,5/8,6	852/990	180/110	200- 240Δ/345-415Y	220- 275Δ/380-480Y	31,5Δ/18,2Y	37,0Δ/21,3Y
DG 840-26	13/15	852/990	250/230	200- 240Δ/345-415Y	220- 275Δ/380-480Y	46,8Δ/27,0Y	52,0Δ/30,0Y
DG-840-36	20/22	852/990	300/300	200- 240Δ/345-415Y	220- 275Δ/380-480Y	66,7Δ/38,6Y	76,0Δ/44,0Y

Technical drawing

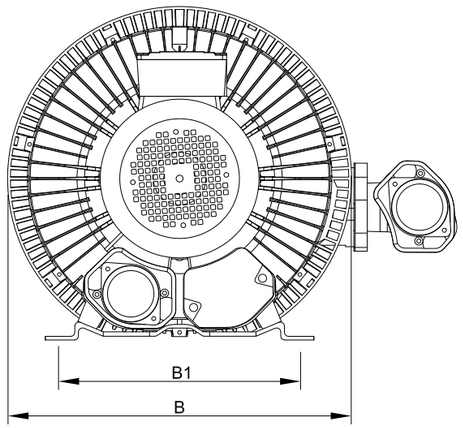

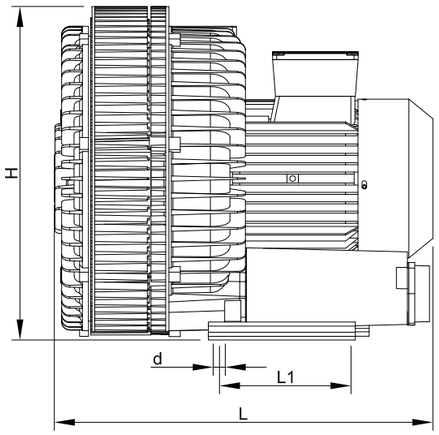

Technical data / Order data

Type	L	L1	B	B1	H	d	Suction connection (g)	Sound level (dB(A))	Weight (kg)	Article number
SV 200/2	411	240	306	240	357	10,2	2"	63,7/68,4	27	BSKV-SV.200.2.000
SV 201/3	411	240	306	240	357	10,2	2"	65,6/68,7	26,5	BSKV-SV.201.2.000
SV 300/2	469	366	370	290	426	10,2	2 2/2"	69,9/69,7	40	BSKV-SV.300.2.000
SV 400/2	472	310	390	310	454	12	3"	74,6/77,4	50	BSKV-SV.400.2.000
DG 230-16	288	83	284	205	272	12	1 1/4"	67/60	17	BSKV-DG.0230.16.00
DG 330-16	318	95	321	225	315	12	1 1/2"	69/66	25	BSKV-DG.0330.16.00
DG 330-26	318	95	321	225	315	12	1 1/2"	69/66	28	BSKV-DG.0330.26.00
DG 430-16	382	115	364	260	377	14	2"	77/74	40	BSKV-DG.0430.16.00
DG 430-26	382	115	364	260	377	14	2"	77/74	43	BSKV-DG.0430.26.00
DG 630-26	423	140	424	290	420	12	2"	79/75	55	BSKV-DG.0630.26.00
DG 630-36	423	140	424	290	420	12	2"	79/75	72	BSKV-DG.0630.36.00
DG 630-46	423	140	424	290	420	12	2"	79/75	82	BSKV-DG.0630.46.00
DG 640-36	423	140	424	290	420	15	2"	79/75	72	BSKV-DG.0640.36.00
DG 640-46	423	140	424	290	420	15	2"	79/75	82	BSKV-DG.0640.46.00
DG 830-16	565	280	486	365	550	16	2 1/2"	81/76	112	BSKV-DG.0830.16.00
DG 830-26	565	280	486	365	550	16	2 1/2"	81/76	142	BSKV-DG.0830.26.00
DG 830-36	565	280	486	365	550	16	2 1/2"	81/76	160	BSKV-DG.0830.36.00
DG 840-16	565	280	486	365	550	16	2 1/2"	81/76	110	BSKV-DG.0840.16.00
DG 840-26	565	280	486	365	550	16	2 1/2"	81/76	140	BSKV-DG.0840.26.00
DG-840-36	565	280	486	365	550	16	2 1/2"	81/76	160	BSKV-DG.0840.36.00

General information



- comprising vacuum pump and storage
- various combinations available
- optional expansion possible with vacuum-controlled motor switching

Example use

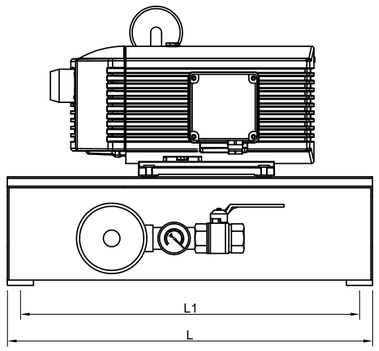

Technical drawing

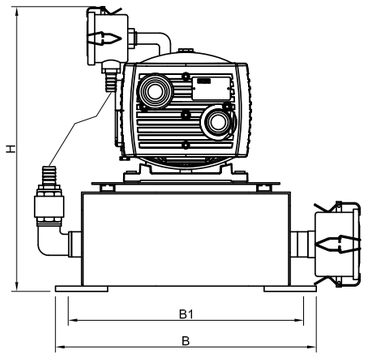

Technical data / Order data

Type	Vacuum pump	Storage (l)	L	B	H	L1	B1	Weight (kg)	Article number
BEE 16/50	VT 4.16	50	700	500	405	650	450	64	BEE.16.050.000
BEE 25/50	VT 4.25	50	700	500	458	650	450	72	BEE.25.050.000
BEE 40/50	VT 4.40	50	700	500	435	650	450	80	BEE.40.050.000
BEE 40/100	VT 4.40	100	700	600	654	650	550	150	BEE.40.100.001
BEE 60/50	KVT 3.60	50	700	500	550	650	450	118	BEE.60.050.001
BEE 60/100	KVT 3.60	100	700	600	658	650	550	132	BEE.60.100.001

General information

- pneumatic vacuum generator
- in-built compressed-air regulator with pressure gauge for regulating the inlet compressed air, an ejector, control valves and a vacuum switch
- in-built non return valve prevents vacuum drops in the system
- particularly suitable for small clamping devices or for installation into handling systems



Technical drawing

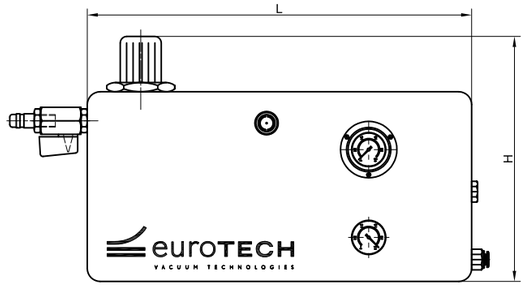

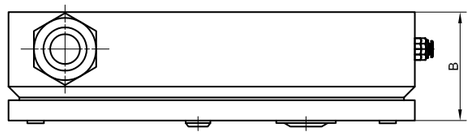

Technical data / Order data

Type	B	H	L	Weight (kg)
PVE	80	191,2	300	4,22

Type	Air consumption (l / min)	Suction volume (l / min)	Final vacuum	Article number
PVE	100	51,6	80 %	PVE.002.000

05 Accessories

Accessories for vacuum components 126
Suction plate coating series MTC 126
Exploded view of suction plate series A-P, articulated 128
Exploded view of suction plate series R-K, articulated 129
Repair kit, R-K suspension 130
Clamping clips series SP 131
Foam rubber seal series OSRS 132
Cellular rubber seal series BZRS and ZPRS 133
Flow resistance series BDCN-STR 134
Fibre rings series FDR 135
Flow limitation with grub screw (MS) 136
Flow limitation with flight pin (STR) 137
Flange plate bracket series FPH 138
Clamping plate set series BCS 139
Cross clamping piece series BCCP (aluminium) 140
Cross clamping piece series BCCP (steel) 141
Suction cup mounting system series SMS 142
Ball joint series BAA 143

Valve technology 144
Ball valve series BSV-E 144
Ball valve series BHVB 145
Manual slide valve series BHSV 146
Check valve series KO 147
Pin valve series BPV 148
Pin valve series BETV-G 149
Vacuum valve series BSVM 150
Vacuum pulse valve series BSVM-IM 151
Vacuum valve construction unit series BSVDM 152
Change-over valve series BCOV 153
Change-over valve series BCOV-ET 154
Change-over valve series BCOV-B 155
Vacuum limiting valve type VBV-BSKV 156

Filter technology 157
Venting filter series BBF 157
Vacuum filter series BVF 158
Vacuum filter series BVF-D 159
Vacuum filter series BVF-K 160
Water separator series BWS 161

Control, measuring and monitoring 162
Vacuum test case VPK 162
Vacuum switch type Mech 163
Vacuum switch type BUS-PSVDD 164
Vacuum switch type BUS-SPAB 165
Vacuum gauge series BVG-NV 166
Vacuum gauge series BVG-HV 167

Connection technology 168
Rotary feedthrough series BRVU 168
Connecting nipple for vacuum hose series BHN 169
Double threaded nipple series BDCN 170
Reducing nipple series BRN 171
Vacuum distributor series BVD 172
Vacuum hose series BVH-T 173
Vacuum hose series BVH-K 174
Vacuum hose series BVH-F 175
Hose clips series BCC 176
Bridge clamps series BCC-B 177
Wire hose clamps series BCC-D 178

Vacuum generation 179
Vacuum reservoir series BVR 179

General information





- avoid suction cup marks on sensitive surfaces (e.g. coated glass or polished stainless steel sheets)
- lint-free material with sewn-in elastic band
- are drawn over the suction cup and held securely by residual stress
- matching sizes for all common suction cups from euroTECH (also oval and rectangular suction cups)

Example use



Technical drawing

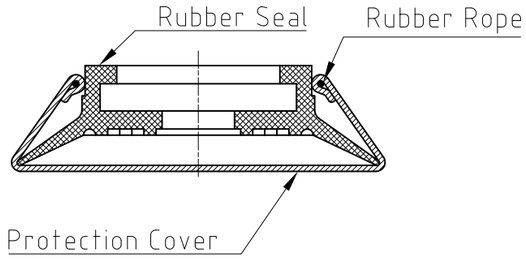

Safety hints for MTC

The suction cup covers of the MTC series developed by euroTECH have particularly been designed for the field of mark free glass and coated glass. By using MTC type covers on the suction cups rubber marks on the glass surface are prevented but only if the cover used is clean and in good general condition.

Tests have shown that the frictional coefficient between rubber seal and glass plate is considerably reduced by using the cover for the suction cups, i.e. the glass plane can slide slowly due to the lower frictional coefficient. Evidence by how many percent the frictional coefficient is reduced cannot be given, as the geometry of the seal and the contact surface play a roll, as described previously (smooth contact surface, grooved contact surface or with naps etc.)

Technical data / Order data

Type	D	Article number
MTC 1	100 - 115	MTC.001
MTC 2	120 - 130	MTC.002
MTC 3	160 - 190	MTC.003
MTC 4	210 - 220	MTC.004
MTC 5	230 - 250	MTC.005
MTC 6	280 - 320	MTC.006
MTC 7	330 - 350	MTC.007
MTC 8	55 - 60	MTC.008
MTC 9	70 - 80	MTC.009
MTC 10	360 - 400	MTC.010
MTC 14	150	MTC.014
MTC 30	250 - 280	MTC.030
MTC 31	40	MTC.031

Type	Width (mm)	Length (mm)	Article number
MTC 11	55	100	MTC.011
MTC 15	330	600	MTC.015
MTC 16	430	700	MTC.016
MTC 17	55	200	MTC.017
MTC 18	260	410	MTC.018
MTC 19	300	500	MTC.019
MTC 20	70	170	MTC.020
MTC 23	90	190	MTC.023

Exploded view of suction plate series A-P, articulated

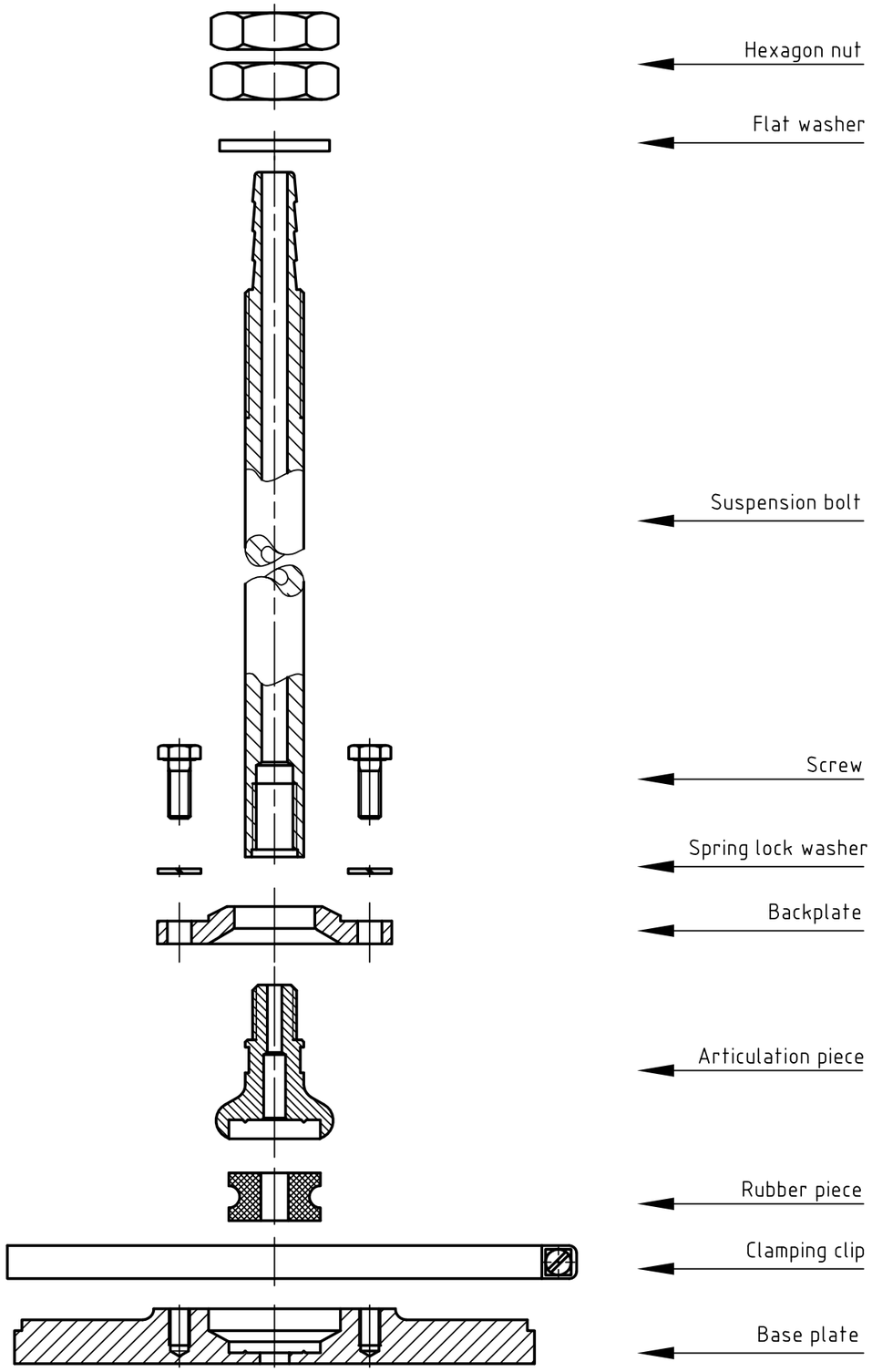

Exploded view of suction plate series R-K, articulated

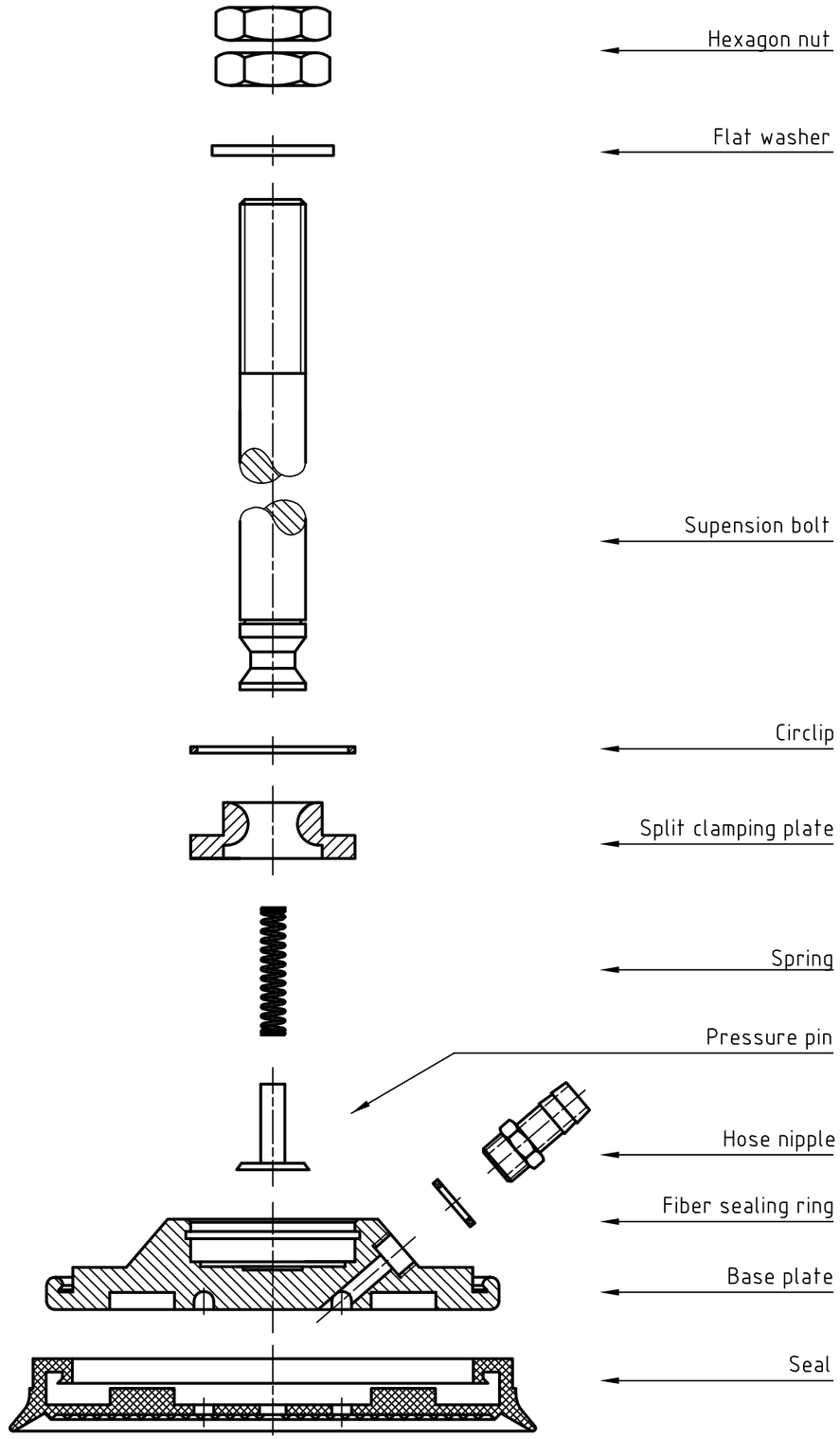

General information

- repair kit can be used for all suction plates with R-K suspension



Technical drawing



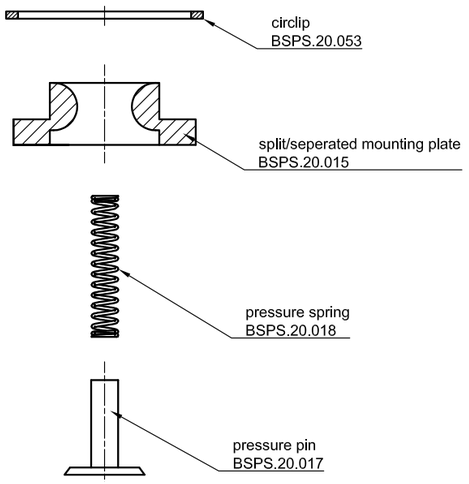

Order data

Type	Scope of delivery				Article number
Repair kit, R-K	divided mounting plate	pressure spring	retaining ring	mushroom-shaped pressure piece	BSPS.20.500

General information

- for ensuring replaceable seals on the base plate
- Diameter: 30 mm to 350 mm
- made of Zinc-plated steel or stainless steel
- clamping clip stamped in clamping area



Technical drawing

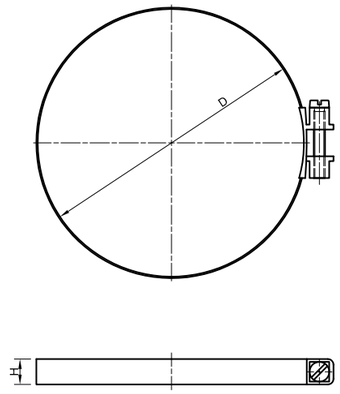

Example use



Technical data / Order data

Type	D	H	Weight (kg)	Suitable for	Article number
SP 1	95	9	0,022	BSP 110 R / 120 RL / 160 BY	BSPS.11.001
SP 2	145	9	0,023	BSP 140 D / 160 R / 180 L / 180 RL	BSPS.11.002
SP 3	235	9	0,033	BSP 250 R / 270 RL	BSPS.11.003
SP 4	203	9	0,035	BSP 250 L (V+D)	BSPS.11.004
SP 5	181	9	0,023	BBSC 250 R	BSPS.11.005
SP 6	116	9	0,019	BBSC 200 R	BSPS.11.006
SP 7	111	9	0,020	BSP 150 HE	BSPS.11.007
SP 9	250	9	0,029	BSP 280 PK	BSPS.11.009
SP 10	148	9	0,020	BSP 200 RL / 200 PK	BSPS.11.010
SP 11	200	9	0,025	BSP 230 RL / 230 NO	BSPS.11.011
SP 12	240	9	0,030	BSP 290 RL	BSPS.11.012
SP 13	209	9	0,027	BBSC 285 G/61 / 285 G/85	BSPS.11.013
SP 14	270	9	0,033	BSP 320 RL	BSPS.11.014
SP 15	300	9	0,034	BSP 350 RL	BSPS.11.015
SP 16	350	9	0,040	BSP 400 RL	BSPS.11.016
SP 17	143	9	0,021	BBSC 290 BY	BSPS.11.017

General information



- for use as suction plate seal or building clamping devices in the wood industry
- different shapes and sizes available
- fine, closed outer skin

Variants

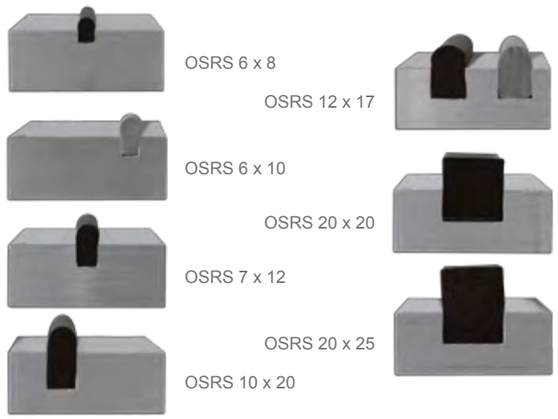

Technical drawing

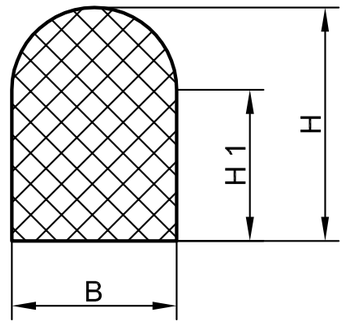

Technical data / Order data

Type	B	H	H1	Color	Article number
OSRS 6 x 8	6	8	4,0	black	OSRS.008
OSRS 6 x 10	6	10	7,0	black	OSRS.006
OSRS 6 x 10	6	10	7,0	grey	OSRS.007
OSRS 7 x 12	7	12	8,5	black	OSRS.009
OSRS 10 x 20	10	20	15,0	black	OSRS.001
OSRS 10 x 20	10	20	15,0	grey	OSRS.002
OSRS 12 x 17	12	17	11,0	black	OSRS.003
OSRS 12 x 17	12	17	11,0	grey	OSRS.004
OSRS 20 x 20	20	20	-	black	OSRS.012
OSRS 20 x 25	20	25	-	black	OSRS.010

General information

- for use as suction plate seal or building clamping devices in the wood industry
- different shapes and sizes available
- fine, closed outer skin

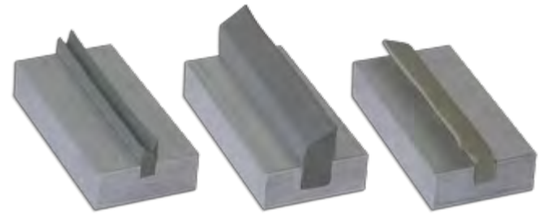

Technical drawing

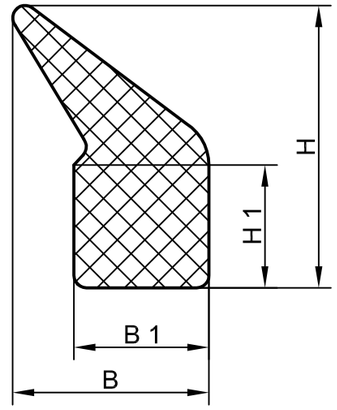

Variants



Technical data / Order data

Type	B	B1	H	H1	Color	Article number
BZRS 8 x 16	8	7	17	14	black	BZRS.003
BZRS 15 x 30	15	-	30	25	grey	BZRS.001.01
ZPRS 11 x 23	16	11	23	10	grey	ZPRS.001

Accessories for vacuum components

General information



- used in conjunction with flight pen
- the flow control valve closes when suction cups are not being used, thus reducing the flow volume
- matching flight pins (STR) (see page 137)

Technical drawing

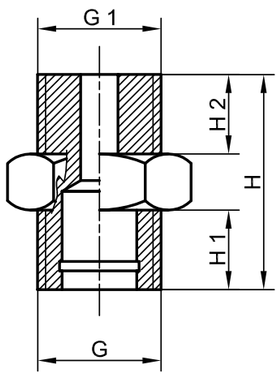

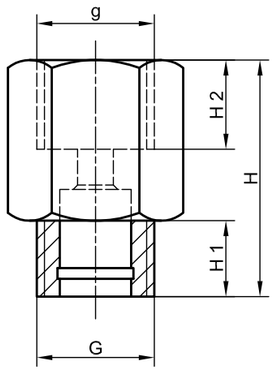

Technical data / Order data

Type	Prepared for flow limitation	G	G1	g	H	H1	H2	Weight (kg)	Article number
BDCN-STR 2	STR	1/4“	1/4“	-	23	8,5	8,5	0,007	BDCN-STR.02.00
BDCN-STR 7	STR	1/4“	-	1/4“	26,5	8,5	-	0,009	BDCN-STR.07.00
BDCN-STR 9	STR	M16 x 1,5	1/4“	-	33	8,5	12,5	0,016	BDCN-STR.09.00

General information

- serve to adjust the height, avoiding gaps between two components or to protect threads
- use with connecting nipples, double thread nipples, hose nipples, flow limitation, connecting nipple for vacuum hose and pin valves
- made of vulcanized fibre



Technical drawing

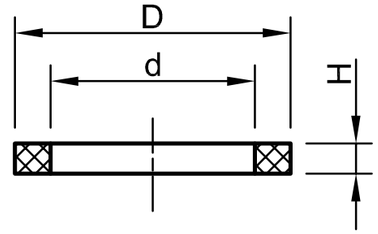

Technical data / Order data

Type	D	d	H	For thread type	Article number
FDR 1	7,5	5,2	1,2	M5	FDR.001
FDR 2	12,7	10,0	1,6	G1/8“	FDR.002
FDR 3	17,4	12,9	1,9	G1/4“	FDR.003
FDR 4	21,3	17,0	1,6	G3/8“	FDR.004
FDR 5	27,8	21,0	1,9	G1/2“	FDR.005
FDR 6	32,7	26,4	1,9	G3/4“	FDR.006
FDR 7	39,2	33,5	1,9	G1“	FDR.007
FDR 8	50,0	40,0	2,0	G1 1/4“	FDR.008

Flow limitation with grub screw (MS)

General information

- grub screws made of PA as flow limitation
- controlled leakage of Ø 0.8 mm to Ø 2.5 mm
- easy to replace



Example drawing (BSCN-PE)

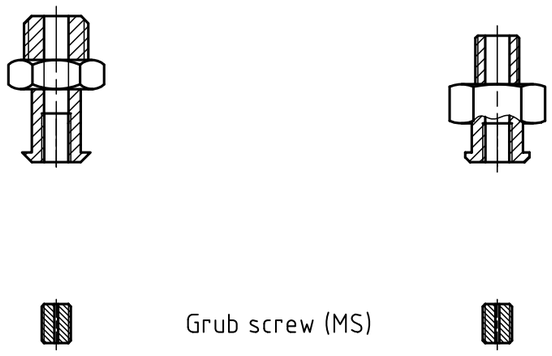

Technical data / Order data

Type	External thread	Leakage bore	Leakage (standard values)	Article number
MS mit ø 0,8 mm	M6	Ø 0,8 mm	7,5 l/min	BSPS.20.236.01
MS mit ø 1,0 mm	M6	Ø 1,0 mm	11,8 l/min	BSPS.20.236.02
MS mit ø 1,2 mm	M6	Ø 1,2 mm	17,0 l/min	BSPS.20.236.03
MS mit ø 1,5 mm	M6	Ø 1,5 mm	26,5 l/min	BSPS.20.236.04
MS mit ø 2,0 mm	M6	Ø 2,0 mm	47,1 l/min	BSPS.20.236.05
MS mit ø 2,5 mm	M6	Ø 2,5 mm	73,6 l/min	BSPS.20.236.08

Flow limitation with flight pin (STR)

General information

- flight pins made of PVC as a flow limitation
- controlled leakage of Ø 0.5 mm to Ø 2.0 mm
- is secured by the locking ring in the nipple or flow resistance
- easy to replace



Example drawing (BSCN-PE)

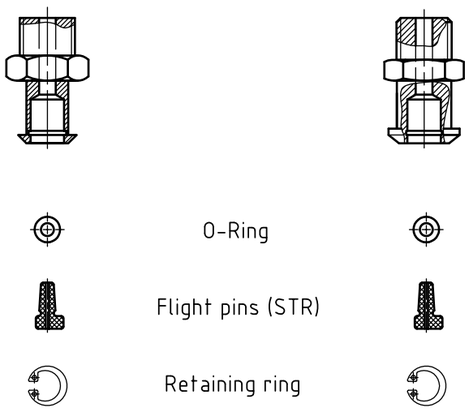

Technical data / Order data

Type	Color	Leakage bore	Leakage (standard values)	Article number
STR mit ø 0,5 mm	black	Ø 0,5 mm	2,9 l/min	STR.001
STR mit ø 0,8 mm	red	Ø 0,8 mm	7,5 l/min	STR.002
STR mit ø 1,0 mm	yellow	Ø 1,0 mm	11,8 l/min	STR.003
STR mit ø 1,2 mm	grey	Ø 1,2 mm	17,0 l/min	STR.004
STR mit ø 1,5 mm	green	Ø 1,5 mm	26,5 l/min	STR.005
STR mit ø 2,0 mm	blue	Ø 2,0 mm	47,1 l/min	STR.007

General information



- for mounting on aluminium groove profiles
- suitable for suspension bolt with Ø 16 mm or Ø 20 mm
- flange plate bracket made of aluminium
- guide bushings made of oil-soaked sintered bronze

Example use

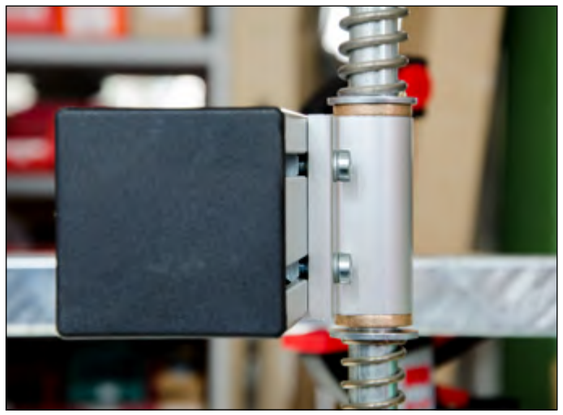

Technical drawing

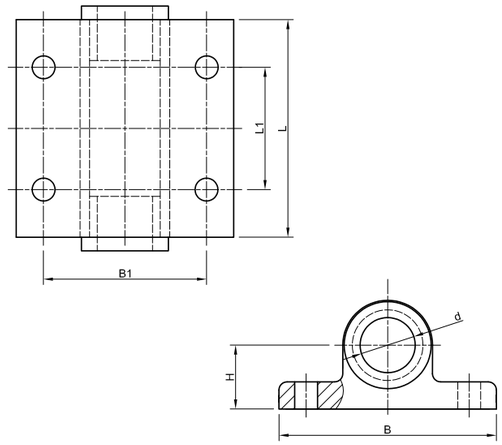

Technical data / Order data

Type	d	B	B1	H	L	L1	Weight (kg)	Article number
FPH 3	20,4	80	60	23,5	80	40	0,312	FPH.003
FPH 6	20,4	80	60	23,5	80	30	0,312	FPH.006
FPH 7	20,4	80	60	23,5	100	70	0,365	FPH.007
FPH 9	20,4	80	60	23,5	80	45	0,312	FPH.009
FPH 10	20,4	80	60	23,5	100	80	0,372	FPH.010
FPH 11	20,4	80	60	23,5	80	60	0,312	FPH.011
FPH 13	20,4	80	60	23,5	50	-	0,233	FPH.013

General information

- for mounting between steel profiles
- suitable for suspension bolt with Ø 16 mm or Ø 20 mm
- set consisting of top and bottom aluminium clamp plate, guide bushings, oil-soaked sintered bronze, star knob screw



Technical drawing

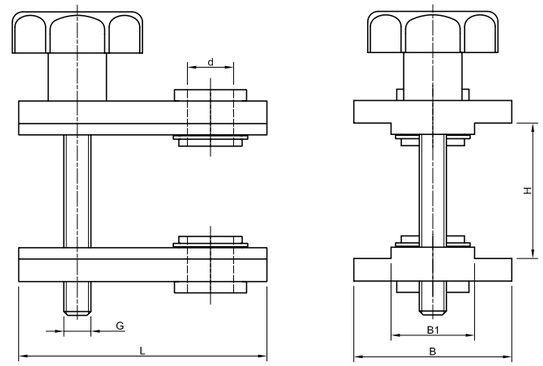

Technical data / Order data

Type	d	B	B1	G	H	L	Weight (kg)	Article number
BCS 1	20,5	70	37	M12	50-70	110	0,700	BCS.001
BCS 2	20,5	70	37	M12	60-100	110	0,710	BCS.002
BCS 3	16,5	70	37	M12	50-70	110	0,700	BCS.003

Cross clamping piece series BCCP (aluminium)

General information



- for mounting on rectangular profiles through two-part design also in enclosed frame
- made of aluminium clamp halves, integrated guide bushings and connecting screws
- suitable from 30 mm to 100 mm profiles and suspension bolt with Ø 16 mm or Ø 20 mm
- guide bushings made of POM or oil-soaked sintered bronze

Example use



Technical drawing

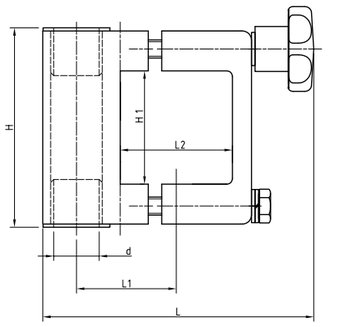

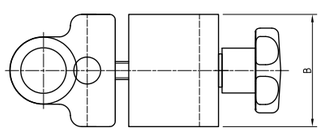

Technical data / Order data

Type	d	H	H1	L	L1	L2	Bushing	Weight (kg)	Article number
30x30 / 16 G	16,3	78,0	30,5	74,0	34,5	30	POM	0,439	BCCP.014
40x40 / 16 G	16,3	78,0	40,5	84,0	39,5	40	POM	0,452	BCCP.015
50x50 / 16 G	16,3	88,0	50,5	93,0	44,5	50	POM	0,526	BCCP.030
30x30 / 20 G	20,3	78,0	30,5	78,0	49,5	30	POM	0,439	BCCP.016
40x40 / 20 G	20,3	78,9	40,5	84,0	39,5	40	POM	0,451	BCCP.017
50x50 / 20 G	20,3	88,9	50,5	93,0	44,5	50	POM	0,510	BCCP.019
60x60 / 20 G	20,3	98,9	60,5	102,5	49,5	60	POM	0,604	BCCP.020
30x30 / 20 SB	20,4	86,0	30,5	77,0	36,0	30	Sintered bronze	0,540	BCCP.026
40x40 / 20 SB	20,4	86,0	40,5	87,0	41,0	40	Sintered bronze	0,540	BCCP.021
50x50 / 20 SB	20,4	96,0	50,5	96,0	46,0	50	Sintered bronze	0,600	BCCP.027
60x60 / 20 SB	20,4	106,0	60,5	105,5	51,0	60	Sintered bronze	0,695	BCCP.029

Cross clamping piece series BCCP (steel)

General information

- for mounting on rectangular profiles through two-part design also in enclosed frame
- consisting of clamp halves made of zinc-plated steel, integrated guide bushings and connecting screws
- suitable for profiles of 50 x 50 mm or 50 x 100 mm and suspension bolt with Ø 20 mm
- Guide bushings made of oil-soaked sintered bronze



Technical drawing

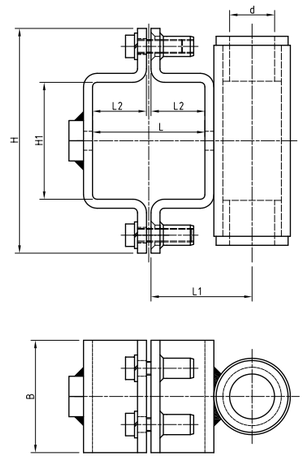

Example use



Technical data / Order data

Type	d	B	H	H1	L	L1	L2	Bushing	Weight (kg)	Article number
50 x 50	20,4	50	100	52	50	45	24	Sintered bronze	0,808	BCCP.062
50 x 100	20,4	50	100	102	50	49	24	Sintered bronze	1,080	BCCP.069

General information



- for mounting on aluminium groove profiles
- consisting of suspension bolts, pressure spring, PA bracket with guide bushings and retaining collar for continuous height adjustment
- additional versions available

Technical drawing

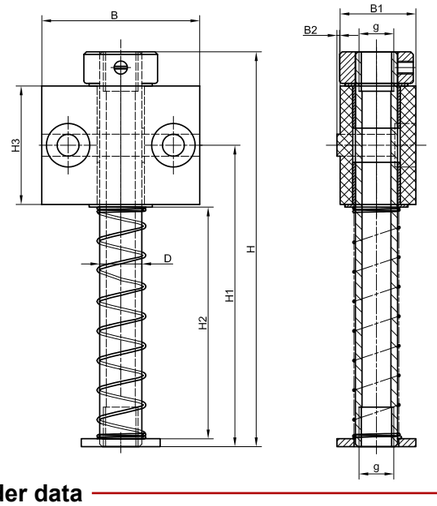

Technical data / Order data

Type	D	B	B1	B2	g	H	H1	H2	H3	Weight (kg)	Article number
ø 16 x 127	16	60	30	1,2	1/4“	127,0	91,5	65	45	0,224	SMS.20.00
ø 16 x 150	16	60	30	1,2	1/4“	150,0	114,5	88	45	0,256	SMS.21.00
ø 16 x 180	16	60	30	1,2	1/4“	182,5	147,0	118	45	0,250	SMS.22.00
ø 16 x 200	16	60	30	1,2	1/4“	200,0	164,5	138	45	0,291	SMS.23.00
ø 16 x 220	16	60	30	1,2	1/4“	220,0	184,5	158	45	0,307	SMS.24.00
ø 16 x 255	16	60	30	1,2	1/4“	255,0	219,5	193	45	0,336	SMS.26.00

General information

- can be used as articulated connector between suction cup and suspension
- made of steel with rubber sleeve against contamination
- 24° pivoting on all sides



Technical drawing

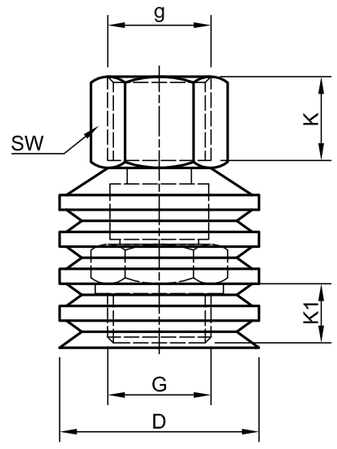

Technical data / Order data

Type	D	G	g	H	K	K1	SW	Weight (kg)	Article number
BAA 1	20,0	1/8“	1/8“	33	8,5	6,5	12	0,021	BAA.001
BAA 2	40,5	1/2“	1/2“	55	17,0	12,0	24	0,116	BAA.002
BAA 3	50,5	3/4“	3/4“	64	17,0	15,0	30	0,238	BAA.003

General information



- 3/2-way ball valve made of brass with nickel-plated surface, venting hole and small plastic handle bar
- Connections: 1/8“ to 3/8“

Technical drawing

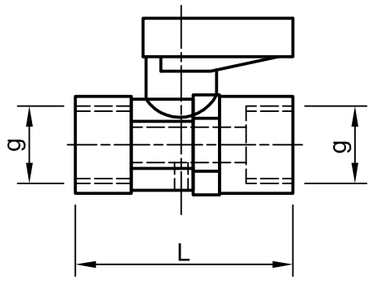

Technical data / Order data

Type	g	L	Weight (kg)	Article number
BSV-E 1	1/8“	35	0,035	BSV-E.001
BSV-E 2	1/4“	37	0,041	BSV-E.002
BSV-E 3	3/8“	42	0,069	BSV-E.003

General information

- 3/2-way ball valve made of brass with nickel-plated surface and large handle bar
- Connections: 1/4“ to 2“



Technical drawing

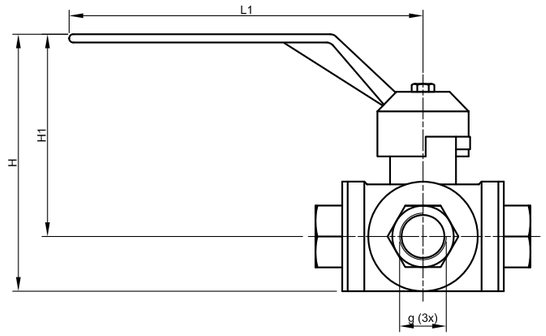

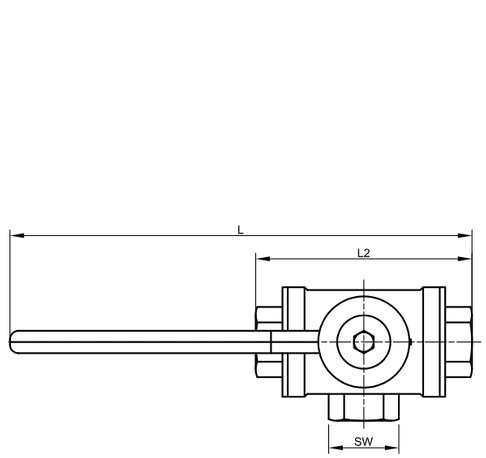

Technical data / Order data

Type	g	H	H1	L	L1	L2	SW	Weight (kg)	Article number
BHVB 1	1/4“	91,5	72,0	164,50	126,0	77,0	22	0,714	BHVB.001
BHVB 2	3/8“	91,5	72,0	164,50	126,0	77,0	22	0,670	BHVB.002
BHVB 3	1/2“	91,5	72,0	164,50	126,0	77,0	27	0,637	BHVB.003
BHVB 4	3/4“	108,0	83,0	190,00	144,0	92,0	34	1,094	BHVB.004
BHVB 5	1“	122,0	95,0	222,00	170,0	104,0	40	1,636	BHVB.005
BHVB 6	1 1/4“	130,0	97,5	229,00	170,0	118,0	50	2,235	BHVB.006
BHVB 7	1 1/2“	145,5	106,0	238,75	170,0	137,5	57	3,600	BHVB.007
BHVB 8	2“	190,0	143,0	337,50	257,5	160,0	70	5,360	BHVB.008

General information



- 3/2-way manual slide valve
- nickel plated, manual slide valve made of brass, slide made of aluminium anodized
- with push-button to protect against accidental operation

Technical drawing

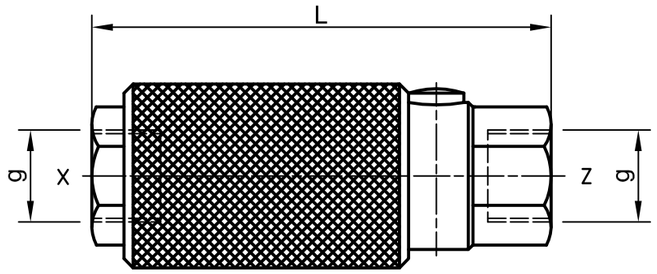

Z= to the vacuum pump
X= consumption side

Technical data / Order data

Type	g	L	Weight (kg)	Article number
BHSV 1	1/4"	58	0,097	BHSV-DK.025.00
BHSV 3	3/8"	80	0,153	BHSV-DK.037.00
BHSV 5	1/2"	100	0,366	BHSV-DK.050.00

General information

- made of brass, with nickel-plated surface and inner plastic flap



Technical drawing

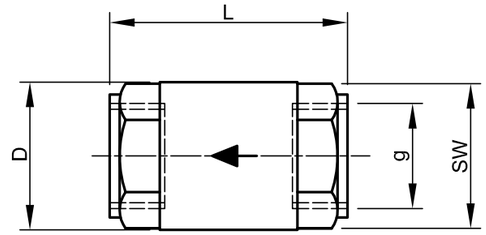

Technical data / Order data

Type	D	g	L	SW	Weight (kg)	Article number
KO 1	-	1/4“	39,0	16	0,042	KO.541.001.402
KO 2	28,0	3/8“	45,0	21	0,089	KO.541.001.403
KO 3	29,5	1/2“	47,5	25	0,102	KO.541.003.404
KO 4	36,5	3/4“	53,0	31	0,156	KO.541.004.406
KO 5	44,0	1“	58,0	38	0,233	KO.541.005.408
KO 6	55,5	1 1/4“	66,0	47	0,347	KO.541.006.410
KO 7	63,0	1 1/2“	71,5	54	0,472	KO.541.007.411
KO 8	77,5	2“	80,0	67	0,747	KO.541.008.412

General information



- valve body made of aluminium, tracer pin made of plastic or brass
- the pin valve opens when placed on the workpiece and enables the suction
- if material is missing, the pin valve is closed, thus preventing the vacuum from diminishing

Example use



Technical drawing

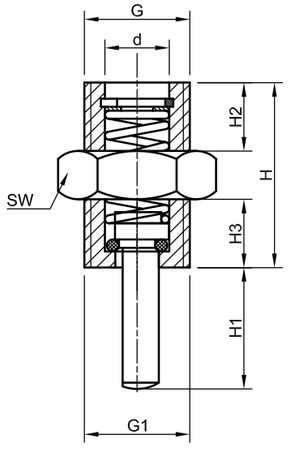

Technical data / Order data

Type	d	G	G1	H	H1	H2	H3	SW	Weight (kg)	Article number
BPV 1	8	1/4“ AG	1/4“	23	15,1	8,5	8,5	17	0,010	BPV.001
BPV 2	8	1/4“ AG	1/4“	23	11,5	8,5	8,5	17	0,007	BPV.002
BPV 3	8	1/4“ AG	1/4“	24	9,2	8,0	6,0	17	0,012	BPV.003
BPV 4	8	1/4“ AG	1/4“	51	11,5	10,0	30,0	17	0,023	BPV.004
BPV 5	8	1/4“ AG	M10x1,25	24	11,5	8,0	6,0	17	0,011	BPV.005
BPV 12	-	1/2“ IG	1/2“	70	24,0	24,0	14,0	24	0,055	BPV.012

General information

- valve body made of nickel-plated brass, plastic tracer pin
- the pin valve opens when placed on the workpiece and enables the suction
- if material is missing, the pin valve is closed, thus preventing the vacuum from diminishing
- only suitable for fan use



Technical drawing

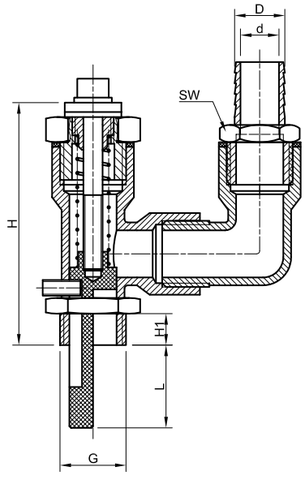

Example use



Technical data / Order data

Type		D	d	G	H	H1	L	SW	Weight (kg)	Article number
BETV-G2	1/2“x10 mm	10	6,50	1/2"	77,10	10	26,30	24	0,348	BETV-G.002.03
BETV-G2	1/2“x14 mm	14	10,50	1/2"	77,10	10	26,30	24	0,368	BETV-G.002.02
BETV-G2	1/2“x16 mm	16	12,00	1/2"	77,10	10	26,30	24	0,358	BETV-G.002.00
BETV-G2	1/2“x20 mm	20	16,00	1/2"	77,10	10	26,30	24	0,370	BETV-G.002.04

General information



- directly controlled 3/2-way solenoid valve
- NO normally open without power, NC closed without power
- available in 24 volt or 230 volt model
- including plug according to DIN 43650, form A (may only be used with the supplied plug!)

Example use

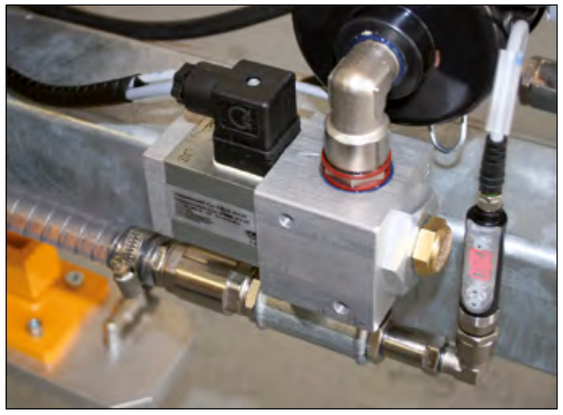

Technical drawing

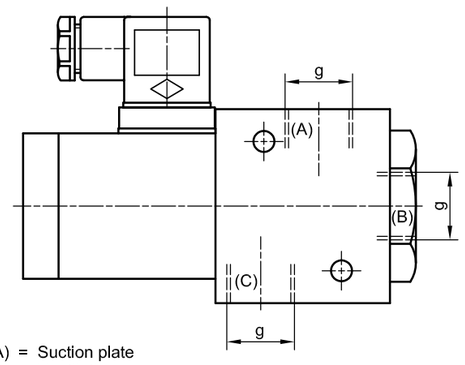

(A) = Suction plate
(B) = Ventilation
(C) = Vacuum pump

Technical data / Order data

Type	g	Nominal width (mm)	Weight (kg)	Article number	
				Vacuum valve (24 Volt)	Vacuum valve (230 Volt)
BSVM 1	1/4“	3,8	0,598	BSVM.402.024.NO.000	BSVM.402.230.NO.000
BSVM 2	3/8“	3,8	0,512	BSVM.403.024.NO.000	BSVM.403.230.NO.000
BSVM 3	1/2“	12,0	1,200	BSVM.404.024.NO.000	BSVM.404.230.NO.000
BSVM 4	3/4“	20,0	5,800	BSVM.406.024.NO.000	BSVM.406.230.NO.000
BSVM 5	1“	25,0	5,700	BSVM.408.024.NO.000	BSVM.408.230.NO.000

General information

- 3/2-way valve
- valve switches on electrical impulses and switches back only when there is a pulse of opposite polarity
- housing made of aluminium, anodised in blue
- control voltage 24V/DL
- please order the plug separately



Technical drawing

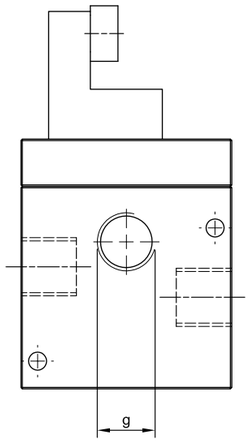

Technical data / Order data

Type	g	Flow (m³/h)	Article number
BSVM-IM 3	1/2“	20	BSVM-IM.04.024.NO.00
BSVM-IM 4	3/4“	40	BSVM-IM.06.024.NO.00
BSVM-IM 5	1“	90	BSVM-IM.08.024.NO.00
Plug for vacuum pulse valve series BSVM-IM			BMV.001.11

General information



- pneumatically-operated 3/2-way valve made of GRP, including 2/2-way pilot-control-valve-unit, vacuum filter and connecting nipple for vacuum hose
- open without pressure (NO)

Technical drawing

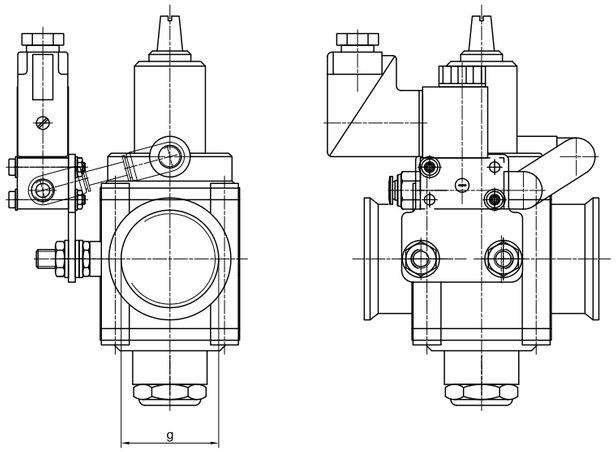

Technical data / Order data

Type	g	Flow (m³/h)	Weight (kg)	Article number Vacuum valve construction unit
BSVDM 1	3/4“	36	1,230	BSVDM.406.10.00
BSVDM 2	1 1/4“	130	1,570	BSVDM.414.10.00
BSVDM 3	2“	310	2,130	BSVDM.416.10.00

General information

- 3/2-way valve suitable for use in side channel blowers
- electrically or pneumatically operated
- for flow rates up to 200 m³/h
- housing made of aluminium
- available in 24V and 230V model

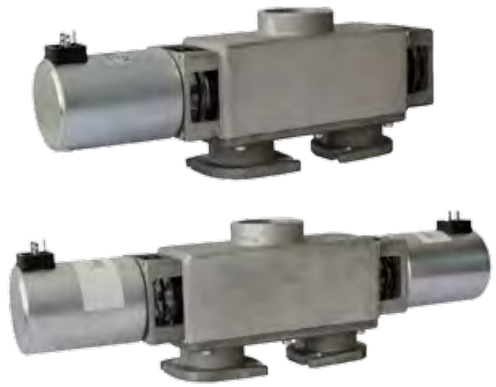

3D drawing

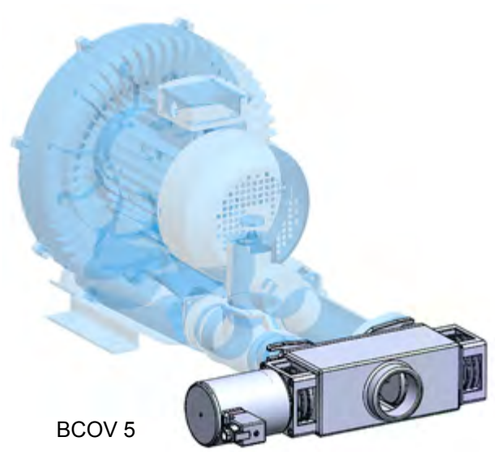

BCOV 5



BCOV 6

Technical data / Order data

Type	Weight (kg)	Article number change-over valves		
		230 Volt	24 Volt	Pneumatic
BCOV 5	5,820	BCOV.005.230	BCOV.005.024	BCOV.005.000
BCOV 6	9,340	BCOV.006.230	BCOV.006.024	BCOV.006.000

Accessories – Valve technology

General information



- 3/2-way valve
- suitable for use with large side channel blowers
- with pneumatic cylinder
- open without pressure (NO)
- large cross-section for a high flow rate of more than 300 m³/h
- made of aluminium with stainless steel cover
- the mounted control valve is designed for 24 volts or 230 volts of control voltage and already comes with plugs

3D drawing

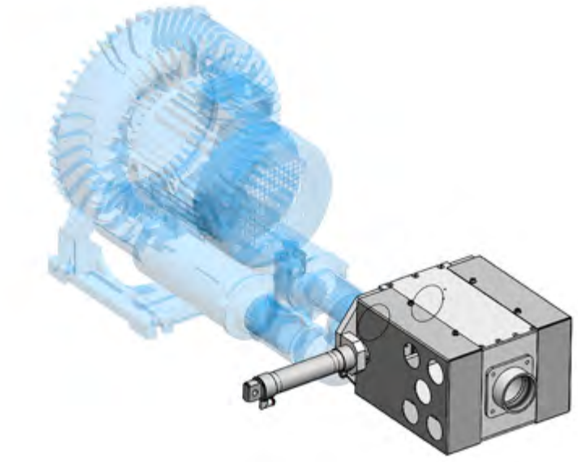

Technical data / Order data

Type	g	L	L1	B	H	Voltage	Nominal width	Weight (kg)	Article number
BCOV-ET 250	2 1/2"	290	273,6	204	372	24 V DC, 3W	70 mm	8,9	BCOV-ET.250.00
BCOV-ET 300	3"	290	273,6	204	532	24 V DC, 3W	80 mm	12,0	BCOV-ET.300.00
BCOV-ET 400	4"	326	288,0	234	692	24 V DC, 3W	100 mm	20,5	BCOV-ET.400.00

General information

- 3/2-way valve suitable for use in side channel blowers
- electrically operated
- Connection: 24V/DC
- housing made of aluminium
- Connection: 4 x 2“ inner
- open without power (NO)
- for flow rates up to 400 m³/h



3D drawing

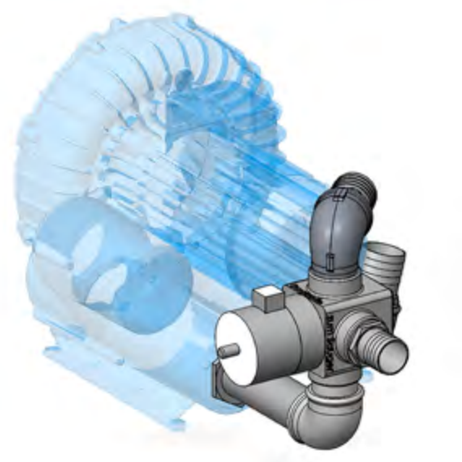

Technical data / Order data

Type	Weight (kg)	Article number
BCOV-B 5	4,000	BCOV-B.200.024.000

General information

- safety valve, which prevents overheating of the side channel blower
- housing made of aluminium with attached vacuum gauge



Example use



Technical drawing

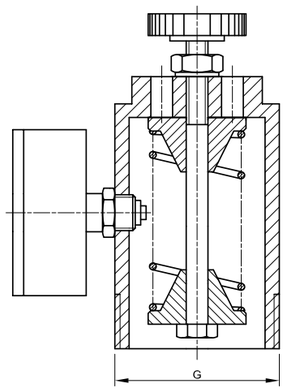

Technical data / Order data

Type	G	Weight (kg)	Adjustable range	Article number
VBV-BSKV	2“	0,540	-150 mbar to -280 mbar	VBV.003
VBV-BSKV	2“	0,540	-50 mbar to -150 mbar	VBV.005

General information

- venting filter for attaching to vacuum valves
- made of zinc-plated steel



Example use

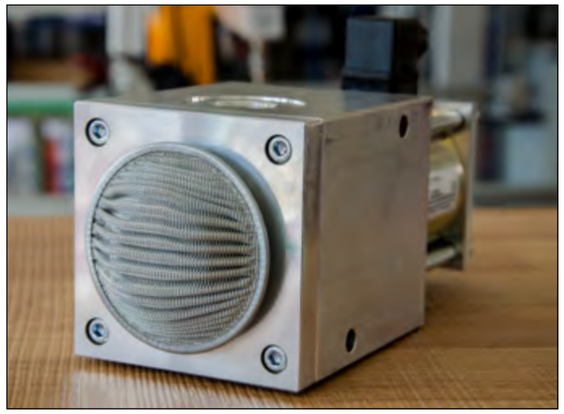

Technical data / Order data

Type	G	Weight (kg)	Flow m³/h	Article number
BBF 1	1/2“	0,087	73	BBF.050.00
BBF 2	3/4“	0,111	73	BBF.075.00
BBF 3	1“	0,244	90	BBF.100.00

General information



- protect the vacuum circuit from dirt
- made of painted steel sheet
- filter cartridge can be quickly replaced without tools

Technical drawing

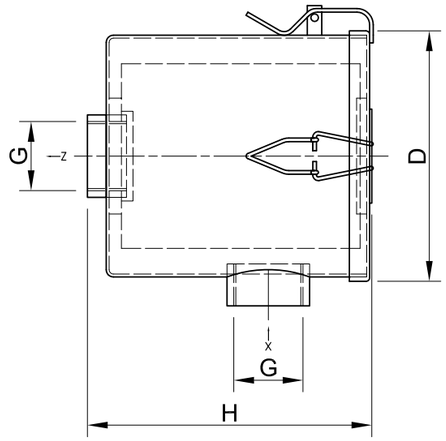

Example use

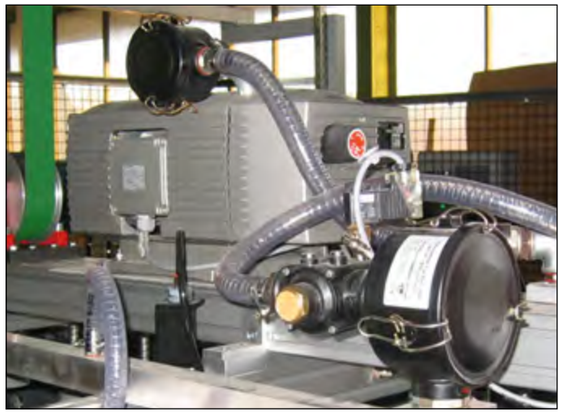

Technical data / Order data

Type	D	G	H	Weight (kg)	Flow (m³/h)	Mesh size (µm)	Article number	
							Vacuum filter	Replacement filter
BVF 1	83	3/8"	80	0,360	12	5-7	BVF.037.001	PAE.532.013
BVF 2 S	83	1/2"	80	0,400	12	5-7	BVF.050.002.S	PAE.532.013
BVF 2 L	101	1/2"	89	0,700	42	5-7	BVF.050.002.L	PAE.532.005
BVF 3	101	3/4"	89	0,725	42	5-7	BVF.075.003	PAE.532.005
BVF 4 S	135	1 1/4"	99	1,063	96	5-7	BVF.125.004.S	PAE.532.002
BVF 4 L	173	1 1/4"	151	1,750	108	5-7	BVF.125.004.L	PAE.532.003
BVF 5	173	1 1/2"	196	1,990	192	5-7	BVF.150.005	PAE.532.006
BVF 6	200	2"	252	4,700	310	5-7	BVF.200.006	PAE.532.004
BVF 7	200	2 1/2"	252	4,220	360	5-7	BVF.250.007	PAE.532.004
BVF 8	285	3"	507	20,700	1.080	5-7	BVF.300.008	PAE.532.011
BVF 9	335	4"	675	20,000	1.260	5-7	BVF.400.009	PAE.532.012

General information

- protect the vacuum circuit from dirt
- designed for compressed air pulses during forced ventilation in the vacuum circuit (max. 2 bar)
- made of painted steel sheet
- filter cartridge can be quickly replaced without tools



Technical drawing

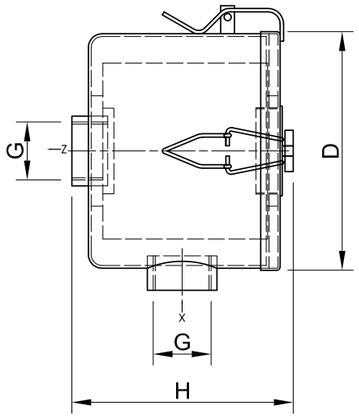

Technical data / Order data

Type	D	G	H	Weight (kg)	Flow (m³/h)	Mesh size (µm)	Article number	
							Vacuum filter	Replacement filter
BVF-D 1	83	3/8"	80	0,360	12	5-7	BVF-D.037.001	PAE.532.013
BVF-D 2 S	83	1/2"	80	0,400	12	5-7	BVF-D.050.002.S	PAE.532.013
BVF-D 2 L	101	1/2"	89	0,700	42	5-7	BVF-D.050.002.L	PAE.532.005
BVF-D 3	101	3/4"	89	0,725	42	5-7	BVF-D.075.003	PAE.532.005
BVF-D 4 S	135	1 1/4"	99	1,063	96	5-7	BVF-D.125004.S	PAE.532.002
BVF-D 4 L	173	1 1/4"	151	1,750	108	5-7	BVF-D.125004.L	PAE.532.003

General information



- protects the vacuum pump from dirt
- housing made of plastic
- the inner filter element is made of a special polyethylene (suitable for slightly moist environments)
- filter cartridge can be quickly replaced without tools

Example use

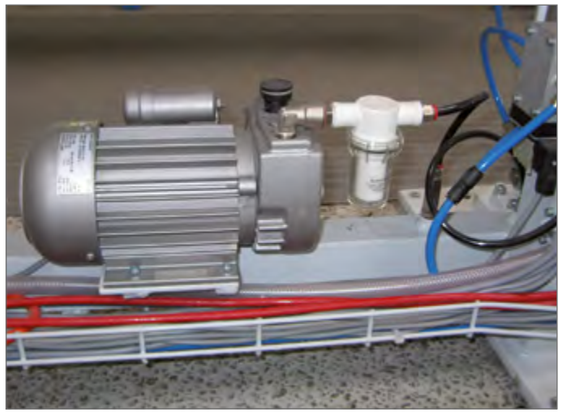

Technical drawing

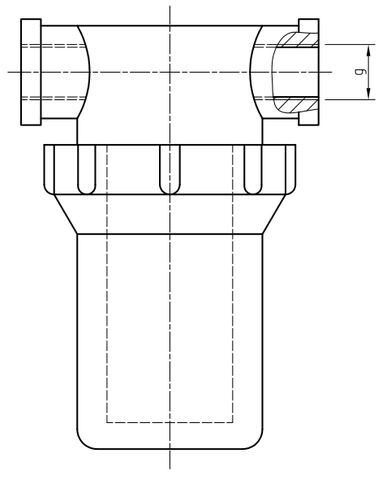

Technical data / Order data

Type	g	Weight (kg)	Flow (m^3/h)	Mesh size (µm)	Article number	
					Vacuum filter	Replacement filter
BVF-K 1	1/8"	0,072	2,7	80	BVF-K.012.001	BVF.010
BVF-K 2	1/4"	0,070	6,5	80	BVF-K.025.002	BVF.010
BVF-K 3	3/8"	0,162	14,5	80	BVF-K.037.003	BVF.011
BVF-K 4	1/2"	0,158	18,2	80	BVF-K.050.004	BVF.011
BVF-K 5	3/4"	0,150	35,7	80	BVF-K.075.005	BVF.011

General information

- water is prevented from entering the vacuum reservoir or vacuum generator by using a water separator
- made of die-cast aluminium
- transparent collection container made of polycarbonate



Technical drawing

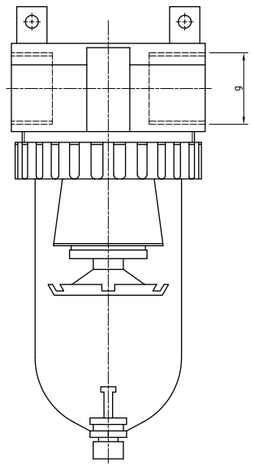

Example use



Technical data / Order data

Type	g	Weight (kg)	Article number
BWS 1	1/8“	0,098	BWS.012.00
BWS 2	1/2“	1,240	BWS.050.00
BWS 3	3/4“	1,240	BWS.075.00
BWS 4	1“	1,200	BWS.100.00

Vacuum test case VPK

General information



- made of grey plastic
- contains digital vacuum gauge
- measuring range: +1bar bis -1bar
- measurement accuracy: +/- 1%
- indicator: 0,000
- incl. charger, measuring plate round, measuring plate rectangular, injection measuring needle, various reductions and various hoses



Technical data / Order data

Type	L	B	H	Weight (kg)	Article number
VPK	400	320	140	4,400	VPK.001

Vacuum switch type Mech

General information

- mechanical vacuum switch
- the switching point is set at the factory to 60%
- other switch point settings are possible
- can be used as NO or NC (changeover contact)
- housing made of aluminium, membrane made of NBR
- control voltage 24 Volt to 230 Volt
- protection class: IP 65



Technical drawing

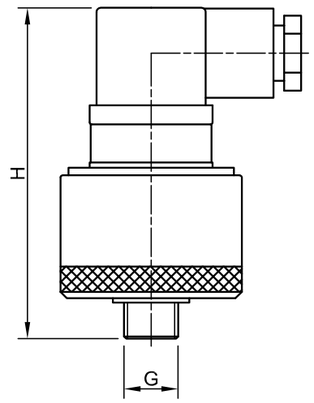

Technical data / Order data

Type	G	H	Weight (kg)	Article number
MECH-02-V	1/4“	81	0,120	BUS.017

Vacuum switch type BUS-PSVDD

General information



- digital programmable vacuum switch
- opening/closing/hysteresis free adjustable
- please order connecting cable separately
- protection class: IP 65
- electrical connection M8x1

Technical drawing

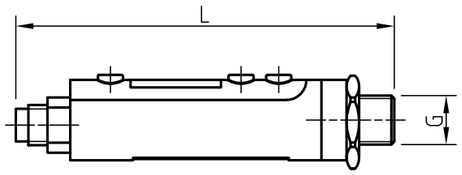

Technical data / Order data

Type	G	L	Weight (kg)	Article number
BUS-PSVDD	1/8“	75,3	0,021	BUS.006
BUS-KAB 5	Standard length of connection cable 5 m			BUS-KAB.005

Product image BUS-KAB 5



Vacuum switch type BUS-SPAB

General information

- digital programmable vacuum switch
- opening/closing/hysteresis free adjustable
- connecting cable included in the scope of delivery
- protection class: IP 40



Technical drawing

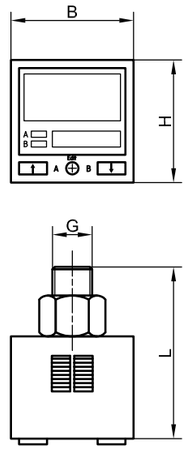

Example use



Technical data / Order data

Type	L	B	H	G	Weight (kg)	Article number
BUS-SPAB	42	30	30	1/8“	0,043	BUS.010

General information



- measuring range: 0 to -450 mbar
- design available with lower or rear connection
- measuring element with silicone pot cushioning for a smooth running of pointer

Technical drawing

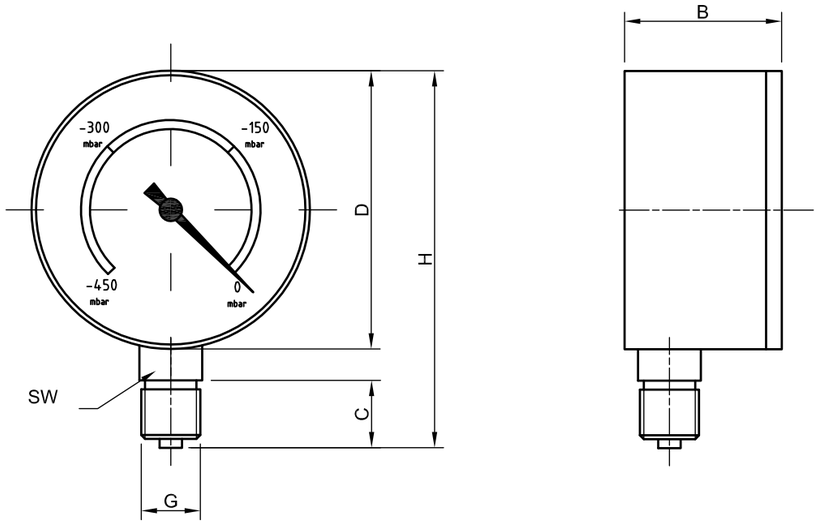

Technical data / Order data

Type	Connection	D	B	C	G	H	SW	Weight (kg)	Article number
BVG-NV 63	Rear	62	54	15	1/4“	-	14	0,131	BVG.007
BVG-NV 63	Lower	62	35	15	1/4“	84,0	14	0,130	BVG.009
BVG-NV 100	Lower	101	50	26	1/2“	138,5	22	0,175	BVG.008

General information

- measuring range: 0 to -1000 mbar
- design available with lower or rear connection
- measuring element with silicone pot cushioning for a smooth running of pointer
- red-green area for identifying the work and danger area



Technical drawing

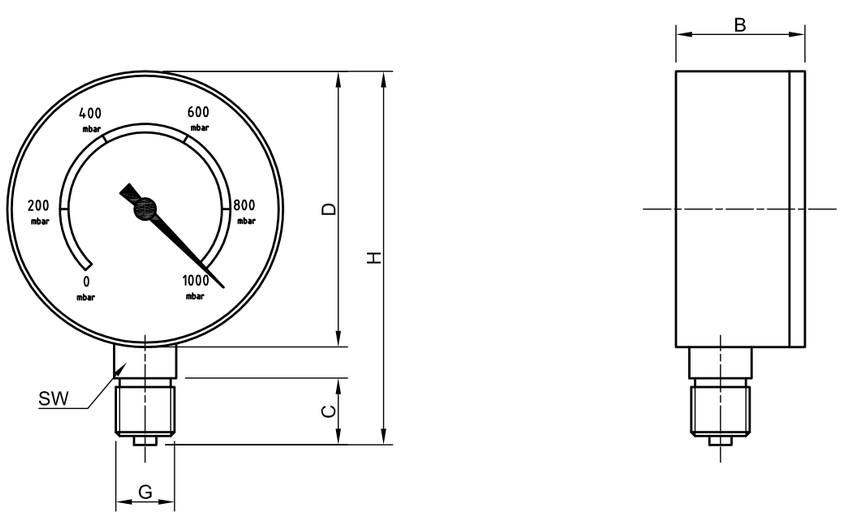

Technical data / Order data

Type	Connection	D	B	C	G	H	SW	Weight (kg)	Article number
BVG-HV 63	Lower	62	29,0	15	1/4“	84	14	0,128	BVG.001
BVG-HV 63	Rear	62	50,0	15	1/4“	-	14	0,131	BVG.002
BVG-HV 100	Rear	99	60,0	22	1/2“	-	14	0,262	BVG.004
BVG-HV 100	Lower	99	31,5	22	1/2“	133	22	0,310	BVG.006

General information



- rotatable construction unit connector
- only for slow swivelling
- Material: brass or nickel-plated brass

3D drawing



Technical drawing

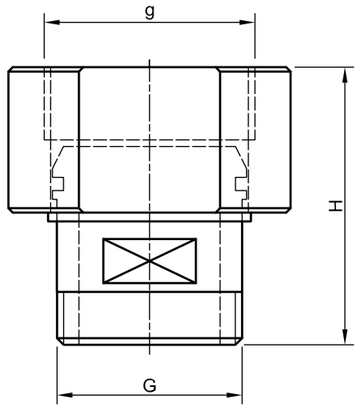

Technical data / Order data

Type	d	G	G1	H	H1	H2	SW1	SW2	Nominal width	Weight (kg)	Article number
BRVU 37	10,5	3/8“ a	1/2“ a	37	10,0	12,0	21	12	10,5 mm	0,041	BRVU-AA.037.050.00
BRVU 37	10,5	3/8“ a	1/2“ i	44	9,0	12,0	24	12	10,5 mm	0,073	BRVU-AI.037.050.00
BRVU 50	15,0	1/2“ a	3/4“ a	42	13,0	12,0	30	17	15,0 mm	0,076	BRVU-AA.050.075.00
BRVU 50	15,0	1/2“ a	3/4“ i	51	13,0	11,0	32	17	15,0 mm	0,143	BRVU-AI.050.075.00
BRVU 75	20,0	3/4“ a	1“ a	49	12,0	13,0	36	24	20,0 mm	0,134	BRVU-AA.075.100.00
BRVU 75	20,0	3/4“ a	1“ i	58	12,0	12,0	36	24	20,0 mm	0,188	BRVU-AI.075.100.00
BRVU 125	32,0	1 1/4“ a	1 1/2“ i	63	12,0	16,5	55	36	32,0 mm	0,235	BRVU-AI.125.150.00
BRVU 200	50,0	2“ a	2 1/2“ i	63	12,5	14,0	-	55	50,0 mm	0,402	BRVU-AI.200.250.00

General information

- nickel-plated brass
- cylindrical external thread
- available with matching fibre rings

Technical drawing

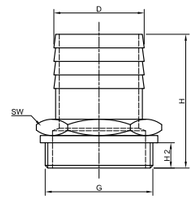



Technical data / Order data

Type	D	G	H	H2	SW	Weight (kg)	Article number
BHN 401	7,5	1/8“	30,0	6,0	12	0,011	BHN-E.MS.012.006
BHN 401	9,0	1/8“	35,0	6,4	14	0,015	BHN-E.MS.012.008
BHN 401	10,0	1/8“	35,5	6,0	12	0,010	BHN-E.MS.012.010
BHN 402	6,5	1/4“	33,0	8,0	17	0,017	BHN-E.MS.025.006
BHN 402	8,0	1/4“	35,5	11,0	14	0,015	BHN-E.MS.025.008
BHN 402	10,0	1/4“	33,0	8,0	14	0,014	BHN-E.MS.025.010
BHN 402	12,0	1/4“	33,0	8,0	17	0,020	BHN-E.MS.025.012
BHN 402	14,5	1/4“	36,0	8,0	17	0,030	BHN-E.MS.025.014
BHN 403	9,5	3/8“	34,0	9,0	19	0,022	BHN-E.MS.037.010
BHN 403	13,0	3/8“	40,5	8,0	19	0,029	BHN-E.MS.037.012
BHN 403	14,5	3/8“	47,0	8,0	19	0,031	BHN-E.MS.037.014
BHN 403	17,5	3/8“	38,0	8,0	19	0,031	BHN-E.MS.037.016
BHN 404	14,0	1/2“	46,0	12,0	24	0,053	BHN-E.MS.050.013
BHN 404	16,0	1/2“	39,0	13,5	22	0,038	BHN-E.MS.050.016
BHN 404	17,5	1/2“	39,5	9,5	22	0,047	BHN-E.MS.050.017
BHN 404	20,0	1/2“	42,0	10,5	22	0,067	BHN-E.MS.050.020
BHN 406	16,0	3/4“	48,5	10,0	22	0,117	BHN-E.MS.075.016
BHN 406	19,5	3/4“	47,0	10,5	23	0,104	BHN-E.MS.075.021
BHN 406	25,0	3/4“	52,0	10,0	28	0,179	BHN-E.MS.075.026
BHN 408	20,5	1“	52,0	14,0	36	0,146	BHN-E.MS.100.020
BHN 408	24,5	1“	52,0	10,5	28	0,119	BHN-E.MS.100.026
BHN 408	31,5	1“	60,0	12,0	34	0,099	BHN-E.MS.100.032
BHN 410	32,0	1 1/4“	59,0	12,5	34	0,115	BHN-E.MS.125.032
BHN 412	38,0	1 1/2“	65,0	13,5	45	0,234	BHN-E.MS.150.038
BHN 414	50,0	2“	74,0	14,0	55	0,490	BHN-E.MS.200.050
BHN 414	60,0	2“	85,0	16,0	62	0,550	BHN-E.MS.200.060
BHN 415	60,0	2 1/2“	94,5	16,5	69	0,474	BHN-E.MS.250.060
BHN 416	76,0	3“	107,0	14,5	94	1,060	BHN-E.MS.300.075
BHN 414	82,0	3“	116,0	25,0	94	0,950	BHN-E.MS.300.080
BHN 418	102,0	4“	140,0	24,0	125	1,900	BHN-E.MS.400.100

General information



- nickel-plated brass
- cylindrical external thread
- available with matching fibre rings

Technical drawing

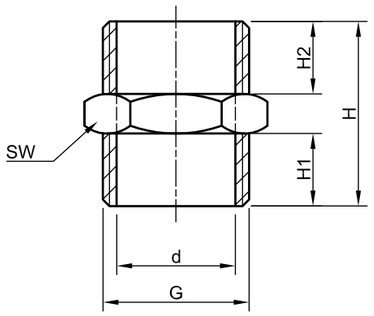

Technical data / Order data

Type	d	G	H	H1	H2	SW	Weight (kg)	Article number
BDCN 1	6,0	1/8“	16,5	6,0	6,0	14	0,011	BDCN.MS.012.00
BDCN 2	8,0	1/4“	21,0	8,0	8,0	17	0,017	BDCN.MS.025.00
BDCN 3	11,0	3/8“	23,0	9,0	9,0	19	0,033	BDCN.MS.037.00
BDCN 4	15,0	1/2“	25,5	10,0	10,0	24	0,035	BDCN.MS.050.00
BDCN 5	20,0	3/4“	31,0	12,5	12,5	26	0,053	BDCN.MS.075.00
BDCN 6	27,0	1“	42,0	16,5	16,5	36	0,156	BDCN.MS.100.00
BDCN 7	34,5	1 1/4“	45,0	19,0	19,0	45	0,153	BDCN.MS.125.00
BDCN 8	40,0	1 1/2“	58,0	25,0	25,0	54	0,272	BDCN.MS.150.00
BDCN 9	51,0	2“	62,0	26,0	26,0	65	0,396	BDCN.MS.200.00

General information

- nickel-plated brass
- cylindrical external thread
- available with matching fibre rings



Technical drawing

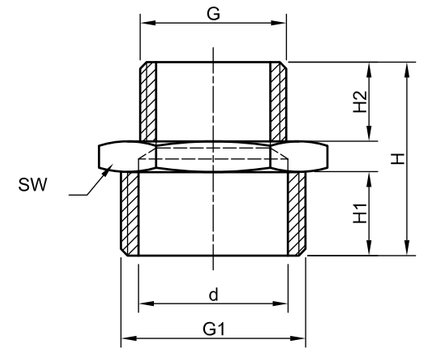

Technical data / Order data

Type	d	H	H1	H2	G	G1	SW	Weight (kg)	Article number
BRN 1	2,6	17,0	7,0	5,0	M5	1/8“	14	0,011	BRN.MS.005.012.00
BRN 2	7,0	19,0	8,0	6,0	1/8“	1/4“	17	0,019	BRN.MS.012.025.00
BRN 3	4,5	23,0	10,5	6,5	1/8“	3/8“	19	0,029	BRN.MS.012.038.00
BRN 4	6,6	25,0	10,5	8,5	1/4“	3/8“	19	0,023	BRN.MS.025.038.00
BRN 5	15,0	23,5	10,0	8,0	1/4“	1/2“	24	0,056	BRN.MS.025.050.00
BRN 6	14,0	24,5	10,0	9,0	3/8“	1/2“	24	0,038	BRN.MS.037.050.00
BRN 7	20,5	36,0	10,5	16,0	3/8“	3/4“	32	0,120	BRN.MS.037.075.00
BRN 8	19,0	27,5	11,0	10,0	1/2“	3/4“	30	0,058	BRN.MS.050.075.00
BRN 9	13,0	40,0	12,5	10,0	1/2“	1“	36	0,111	BRN.MS.050.100.00
BRN 10	25,5	35,0	15,0	12,0	3/4“	1“	40	0,148	BRN.MS.075.100.00
BRN 11	34,0	44,0	19,0	18,0	1“	1 1/4“	45	0,150	BRN.MS.100.125.00
BRN 12	40,0	51,5	23,0	19,5	1 1/4“	1 1/2“	54	0,235	BRN.MS.125.150.00
BRN 13	50,0	44,0	20,5	17,0	1 1/2“	2“	64	0,295	BRN.MS.150.200.00
BRN 14	76,0	55,0	25,0	22,0	2“	3“	100	0,370	BRN.MS.200.300.00
BRN 15	100,0	62,0	25,0	25,0	3“	4“	125	0,435	BRN.MS.300.400.00

General information



- distribution blocks made of aluminium
- for distributing air currents
- various versions available
- including mounting holes

Example use

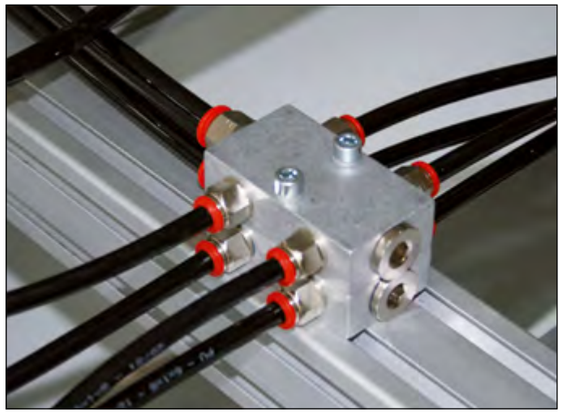

Technical data / Order data

Type	B	G (Inlet)	g (Outlet)	H	L	L1	L2	Weight (kg)	Article number
BVD 1	20	1/4“ (2x)	1/8“ (1x4)	30	120	30	15	0,160	BVD.001
BVD 2	20	1/4“ (2x)	1/8“ (1x5)	30	150	30	15	0,200	BVD.002
BVD 3	20	3/8“ (2x)	1/4“ (1x4)	30	144	36	18	0,163	BVD.003
BVD 4	20	3/8“ (2x)	1/4“ (1x5)	30	180	36	18	0,207	BVD.004
BVD 5	20	3/8“ (2x)	1/4“ (2x2)	40	72	36	18	0,107	BVD.005
BVD 6	20	3/8“ (2x)	1/4“ (2x3)	40	108	36	18	0,165	BVD.006
BVD 7	20	3/8“ (2x)	1/4“ (2x4)	40	144	36	18	0,224	BVD.007
BVD 8	20	3/8“ (2x)	1/4“ (2x5)	40	180	36	18	0,279	BVD.008
BVD 10	20	1/4“ (1x2)	1/4“ (1x2)	40	40	-	20	0,060	BVD.010

General information

- PVC transparent with internal wire spiral
- smooth interior and exterior surfaces
- Temperature range: -10°C to +60°C



Technical data / Order data

Type	d	Bending radius [mm]	Vacuum [mbar]	Weight [kg/m]	Article number	Article number Recommended mounting clamp
BVH 10T	10	50	- 930	0,170	BVH-T.010	BCC.016 (Page 176)
BVH 12T	12	50	- 930	0,200	BVH-T.012	BCC.016 (Page 176)
BVH 14T	14	60	- 930	0,225	BVH-T.014	BCC.001; BCC.002 (Page 176)
BVH 16T	16	70	- 930	0,270	BVH-T.016	BCC.001; BCC.002 (Page 176)
BVH 18T	18	80	- 930	0,290	BVH-T.018	BCC.001; BCC.002 (Page 176)
BVH 20T	20	90	- 930	0,350	BVH-T.020	BCC.002 (Page 176)
BVH 25T	25	110	- 930	0,500	BVH-T.025	BCC.003; BCC.007 (Page 176)
BVH 32T	32	140	- 830	0,650	BVH-T.032	BCC.004; BCC.007; BCC.008 (Page 176)
BVH 38T	38	170	- 830	0,800	BVH-T.038	BCC.004; BCC.005; BCC.008 (Page 176)
BVH 50T	50	230	- 780	1,235	BVH-T.050	BCC.004; BCC.005; BCC.009 (Page 176)
BVH 60T	60	270	- 680	1,700	BVH-T.060	BCC.006; BCC.009 (Page 176)
BVH 70T	70	320	- 680	2,000	BVH-T.070	BCC.013 (Page 176)

General information



- SBR black with internal wire spiral
- smooth interior and exterior surfaces
- due to small bending radi, it is also suitable for use in cable drag chains
- Temperature range: -40°C to +100°C

Technical data / Order data

Type	d	Bending radius [mm]	Vacuum [mbar]	Weight [kg/m]	Article number	Article number Recommended mounting clamp
BVH 14 K	14	58	- 900	0,360	BVH-K.014	BCC.001 (Page 176)
BVH 20 K	20	80	- 900	0,480	BVH-K.020	BCC.002 (Page 176)
BVH 25 K	25	100	- 900	0,560	BVH-K.025	BCC.003 (Page 176)

General information

- PUR transparent with external wire spiral
- smooth interior surfaces
- Temperature range: -40°C to +90°C



Technical data / Order data

Type	d	Bending radius [mm]	Vacuum [mbar]	Weight [kg/m]	Article number	Article number Recommended mounting clamp
BVH 38 F	38	70	- 830	0,520	BVH-F.038	BCC-B.004 (Page 177)
BVH 50 F	50	90	- 780	0,670	BVH-F.050	BCC-B.005 (Page 177); BCC-D.004 (Page 178)
BVH 80 F	80	135	- 590	1,070	BVH-F.080	BCC-D.001 (Page 178)
BVH 90 F	90	150	- 510	1,210	BVH-F.090	BCC-D.002 (Page 178)
BVH 100 F	100	165	- 450	1,340	BVH-F.100	BCC-B.011 (Page 177); BCC-D.003 (Page 178)

Accessories – Connection technology

General information



- suitable for hoses with internal wire spiral
- zinc-plated steel or stainless steel
- hose clip stamped in clamping area

Technical drawing

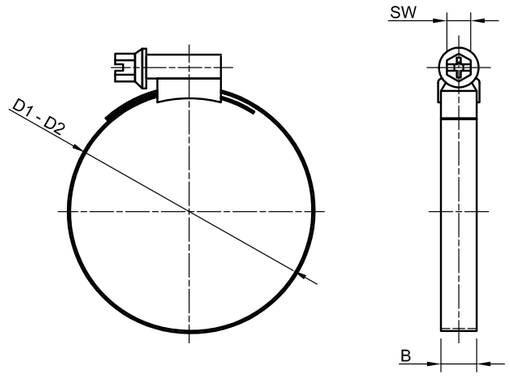

Technical data / Order data

Type	D1 - D2	B	SW	Weight (kg)	Article number
BCC 1	12 - 22	9	6	0,013	BCC.001
BCC 2	16 - 25	9	6	0,015	BCC.002
BCC 3	20 - 32	9	6	0,016	BCC.003
BCC 4	32 - 50	9	6	0,018	BCC.004
BCC 5	40 - 60	9	6	0,020	BCC.005
BCC 6	60 - 80	9	6	0,023	BCC.006
BCC 7	25 - 40	9	6	0,016	BCC.007
BCC 8	30 - 45	9	6	0,017	BCC.008
BCC 9	50 - 70	9	6	0,021	BCC.009
BCC 10	160 - 180	9	6	0,081	BCC.010
BCC 11	97 - 110	9	6	0,047	BCC.011
BCC 12	247 - 260	9	6	1,119	BCC.012
BCC 13	70 - 90	9	6	0,022	BCC.013
BCC 16	8 - 16	9	6	0,012	BCC.016

General information

- suitable for hoses with external wire spiral
- zinc-plated steel or stainless steel
- bridge clamp stamped in clamping area



Technical drawing

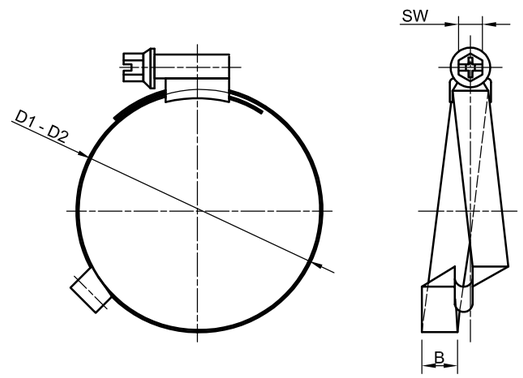

Technical data / Order data

Type	D1 - D2	B	SW	Weight (kg)	Article number
BCC-B 4	32 - 50	9	6	0,020	BCC-B.004
BCC-B 5	40 - 60	9	6	0,025	BCC-B.005
BCC-B 11	110 - 120	9	6	0,035	BCC-B.011

General information



- suitable for hoses with external wire spiral
- zinc-plated steel
- clamps are stretched via radially arranged screw(s)

Technical drawing

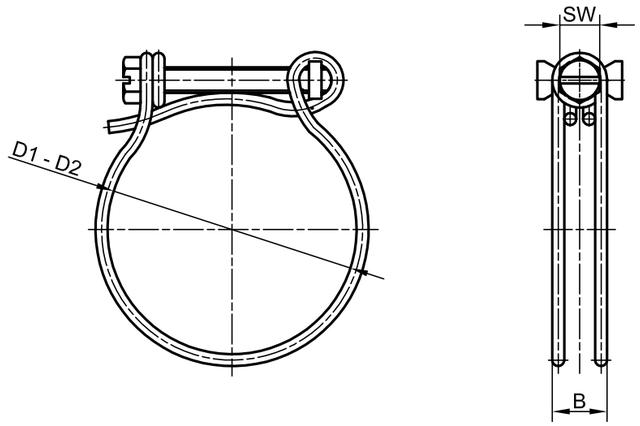

Technical data / Order data

Type	D1 - D2	B	SW	Weight (kg)	Article number
BCC-D 1	78 - 85	11	8	0,032	BCC-D.001
BCC-D 2	87 - 100	11	8	0,043	BCC-D.002
BCC-D 3	97 - 110	11	8	0,046	BCC-D.003
BCC-D 4	50 - 55	11	8	0,025	BCC-D.004

General information

- buffer to cover peak loads
- safety device in case of sudden power failure
- Material: sheet steel
- Surface: powder-coated in standard colour: RAL7035 - light grey



Technical drawing

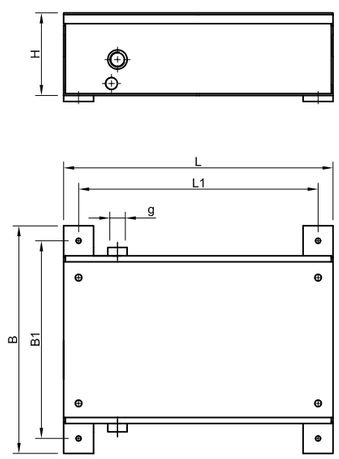

Example use

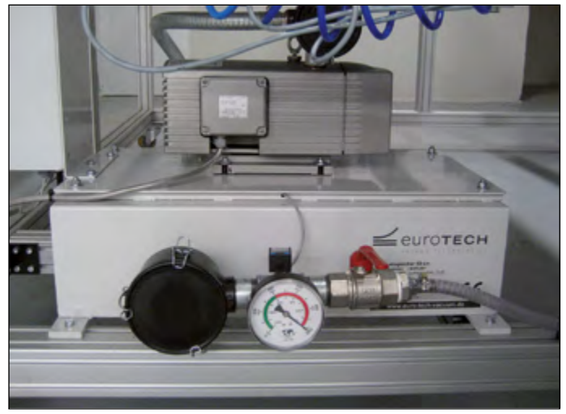

Technical data / Order data

Type	B	B1	G	H	L	L1	Weight (kg)	Storage capacity	Article number
BVR 15	380	330	3/4“	138	450	400	19	15 liter	BVR.004.00
BVR 50	500	450	1 1/4“	198	700	650	42	50 liter	BVR.001.00
BVR 100	600	550	1 1/4“	322	700	650	56	100 liter	BVR.002.00
BVR 200	600	550	1 1/4“	602	700	650	90	200 liter	BVR.003.00

06 Further product range

Suction boxes **182**

Lifting devices **184**

Tube lifter **186**

www.euro-tech-vacuum.com



- for handling cutting and construction wood, wood shavings, glue and sheet goods, pallets and crate parts
- can also be used with cracks, knots or very battered, rough surfaces
- service and maintenance-friendly system
- for use in sawmills, the wood and furniture industry
- compact design and low total weight allow use with industrial robots and portals
- made of aluminum extruded section
- available in various sizes



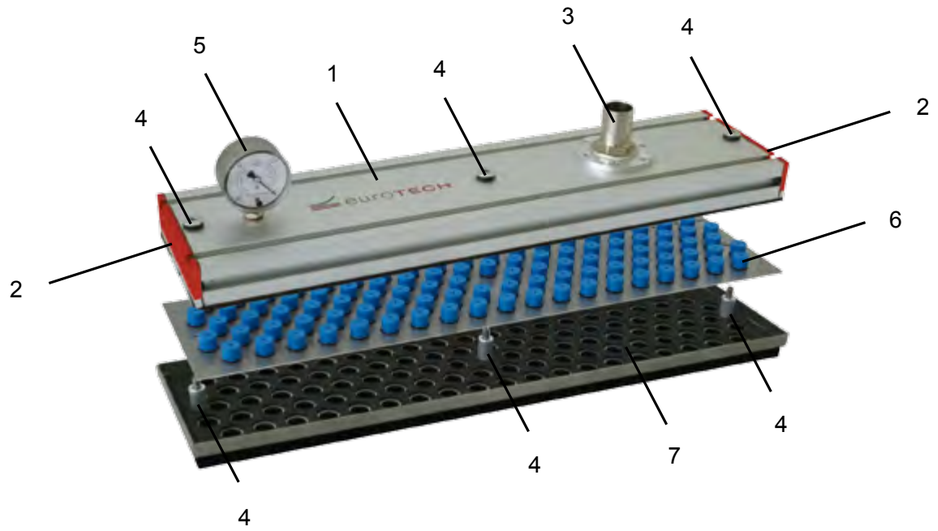

1. Suction box section with two upper grooves and one grove on each side
2. End covers
3. Hose nipple (the number may vary)
4. Bolt system for opening and closing the suction box (the number may vary)
5. Vacuum gauge (optional)
6. Valve carrier plate
7. Suction sheet with suction mat (underneath) and sealing mat (above)



*find more information about this in the appropriate special catalogue

Type HG SD 250 04 290 RL

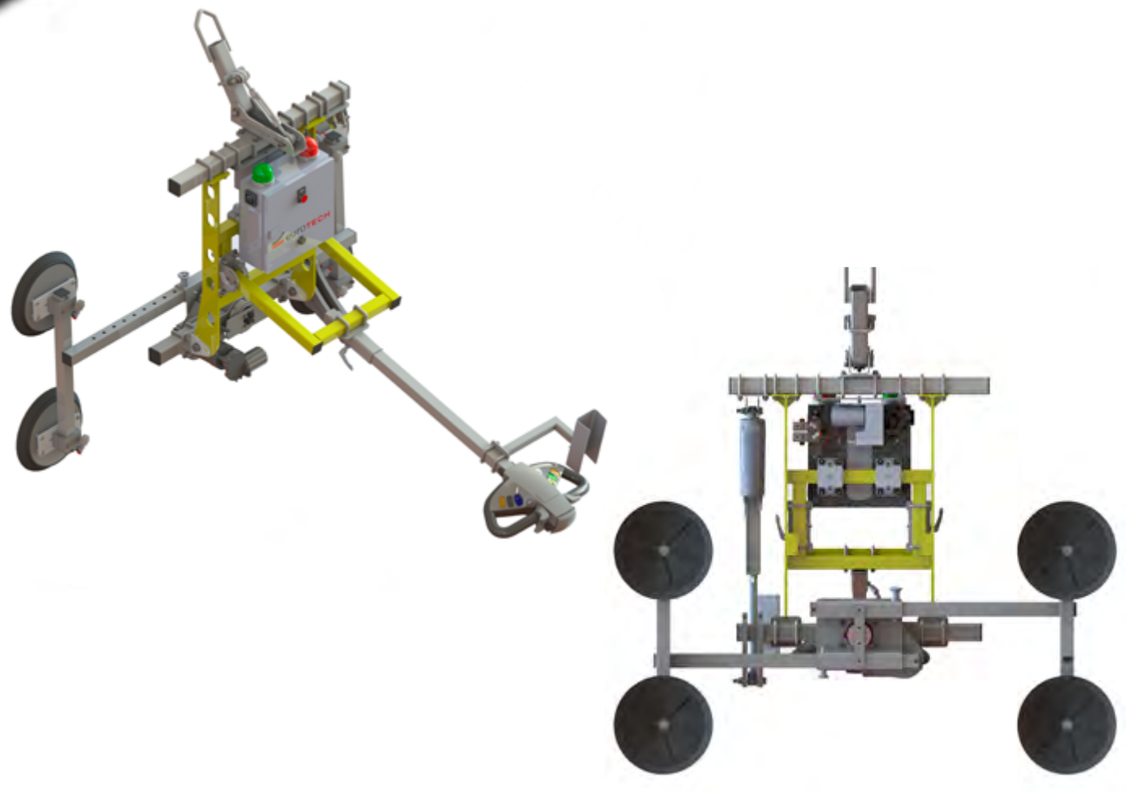

Type HG SD 360 04 400 RL



Type HG SF 500 10 230 RL

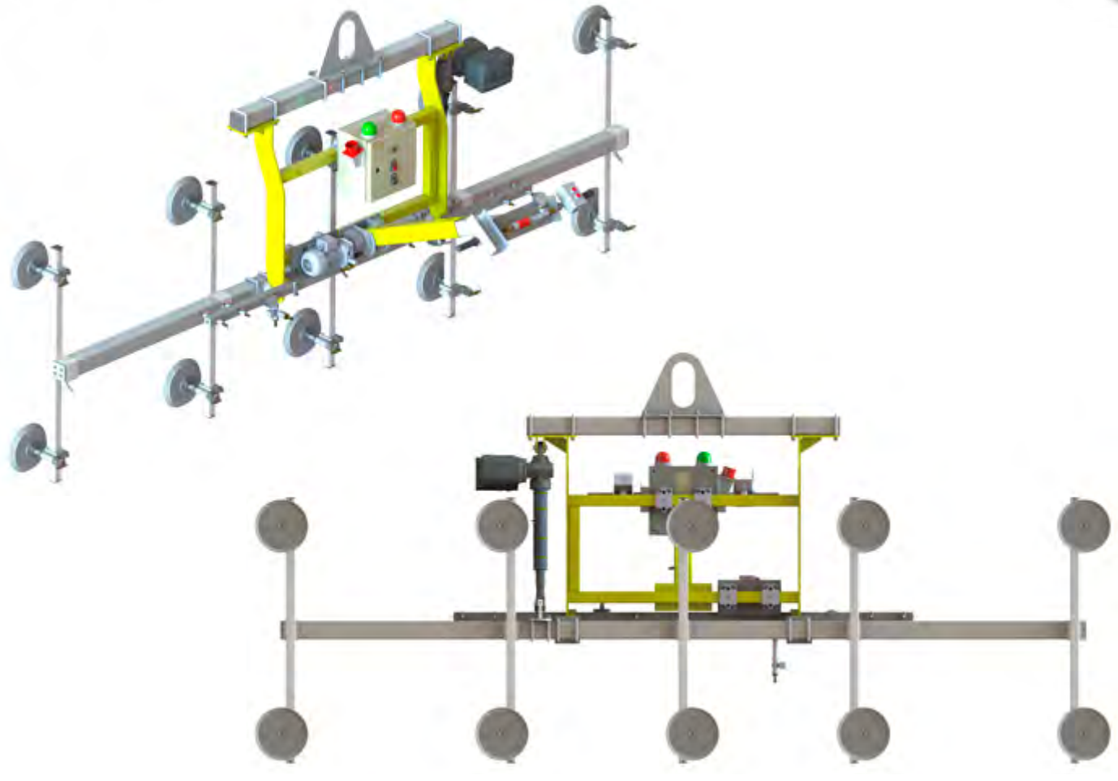

Type HG HF 350 2 SKA

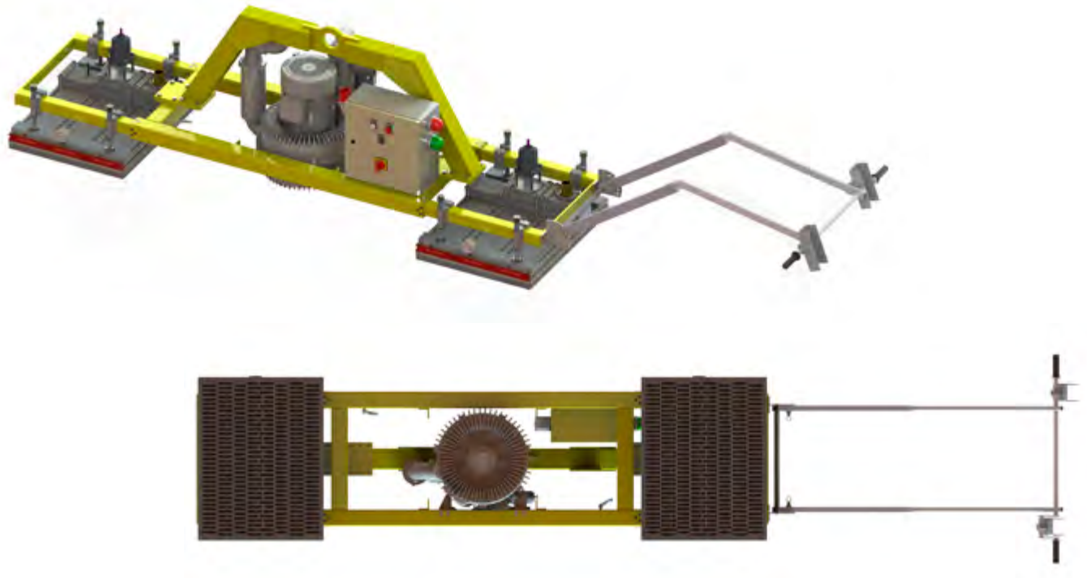

*find more information about this in the appropriate special catalogue

with double suction cup

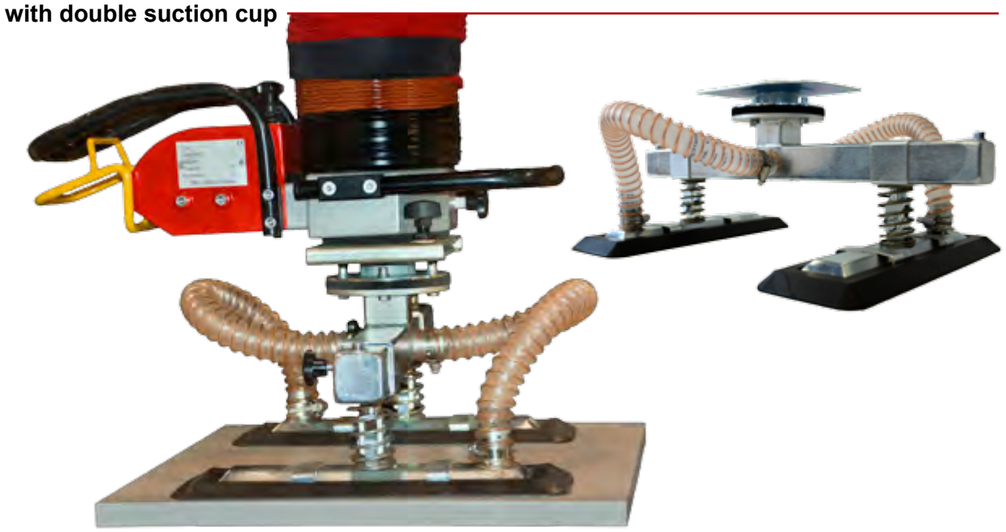

with oval suction pad



Advantages

1. Ergonomics
2. Planning
3. Save energy
4. Safety
5. Long service life
6. Maintenance-friendly



*find more information about this in the appropriate special catalogue

Either for or with patent holding system – in groups E4 and E5

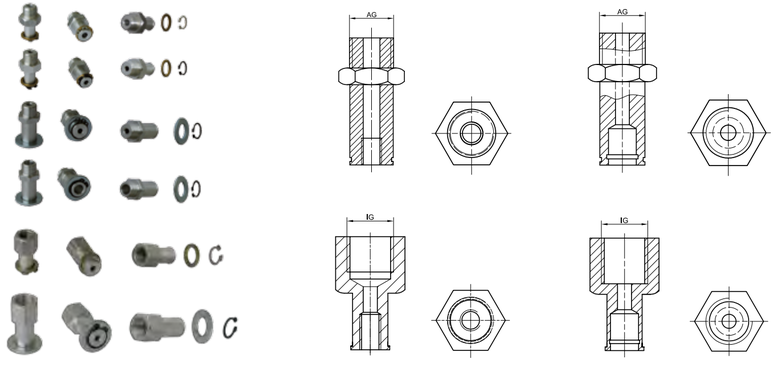

Mushroom shaped head – in groups E0, E1, E4, E6 and CO

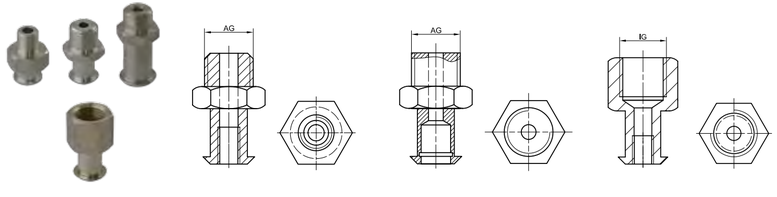

Model with grooves – in groups E2, E3 and E7

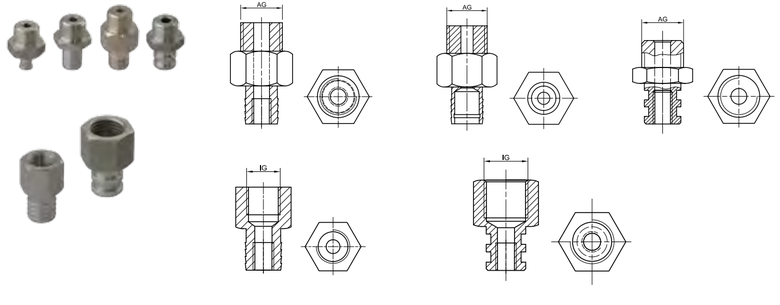

Schema

Model for inserting – in groups W060, W070 and W090

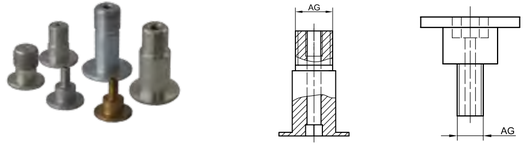

euroTECH Vertriebs GmbH
VACUUM TECHNOLOGIES
Dammstr. 1
72351 Geislingen
GERMANY
Telephone: +49 7433 90468-0
Fax: +49 7433 90468-13
E-Mail: info@euro-tech-vacuum.de

euroTECH
VACUUM TECHNOLOGIES

Connection nipples

Selection guide



| Connection nipple | | | | Suction cup types | | | |

eurotech Vertriebs GmbH
VACUUM TECHNOLOGIES

Dammstr. 1
72351 Geislingen
GERMANY

Telephone: +49 7433 90468-0
Fax: +49 7433 90468-13
E-Mail: info@euro-tech-vacuum.de
Internet: www.euro-tech-vacuum.com

Art.-Nr.: 6800.01.2015.02