Your personal contact:

euroTECH HANDLING

euroTECH Handling GmbH
Maybachstraße 7
72348 Rosenfeld
GERMANY

Phone: +49 7428 9 3912 - 0 | info@et-handling.de | www.et-handling.de

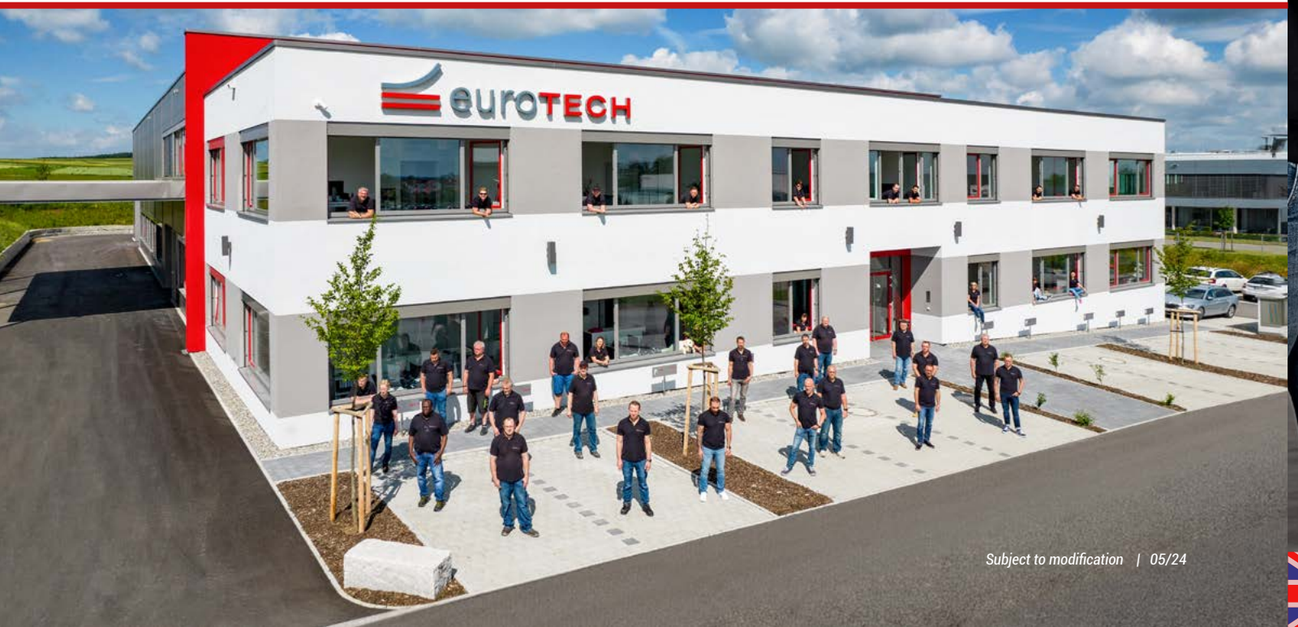

Subject to modification | 05/24

Cover picture from FotoLENGERER

Product overview



the smart way to lift loads

Components

Product goups

Our product portfolio is divided into four product groups.









Intelligent vacuum handling solutions and products

At euroTECH Handling we show you how beneficial efficient vacuum technology is to your organization when it is used correctly. A motivated and well-coordinated team is the foundation of our success. In addition to our overall enthusiasm for efficient technology, we live to satisfy our customers.

– powerful – innovative – solution-oriented – flexible –

Everything from a single source and Made in Germany.

Main Industries



GLASS



WOOD



SHEET METAL

Is your industry not included? No worries. We are also on our way in other industries, such as plastics or stone. Simply talk to us about your handling problem and our team of experts will be happy to support you.

What defines us

Our values, your strength – for solutions that will take your business to the top!
Many companies offer vacuum technology. At euroTECH we aim to offer our customers more. We provide you with complete support in finding solutions for your handling requirements - with our values, our team, and our products. Your success is our goal.

That's why our value structure is built like a rock-solid machine:

1.) The foundation of values – the basis of our actions
The machine base is formed by our three basic values: willingness to help, innovation and efficiency combined with effectiveness. These are the prerequisite for everything we do. Our customers can always rely on that.

2.) The core values – the heart that drives us
We score with enthusiasm, customer orientation, flexibility and competence. What matters most to us is to present our customers with optimal solutions. Only those with compassion and understanding can successfully understand and inspire customers.

3.) The top values – As unique as our customers
A trusting collaboration and reliability in dealings and actions gives our customers the security they need to know that they are in good hands with their individual issues. This is what every single euroTECH team member stands for. If you expect top performance, you can rely on our top values.



Vacuum components

euroTECH modular system
All of our components are modular and can therefore be easily adapted to individual needs.

The modularity of our vacuum components offers you five advantages:

- High flexibility when changing materials during the production process
- High process reliability due to optimal material selection
- Cost reduction in the initial purchase
- Cost savings during ongoing operation, as only the suction cup itself wears out and needs to be replaced. The suction plate, however, does not.
- Less waste and disposal costs



Suction plates
with base plate,
with or without suspension bolts



Flat suction cup
with connecting nipple



Bellows suction cup
with 1.5; 2.5 and 3.5 folds,
with or without base plate
or connecting nipple





Vacuum components

Our unique modular suction plate system

Seals



Geometries etc.
- short to long sealing lip
- grooved rubber pad
- trapeze support
- support bars
- foam rubber

Materials
- Nitrile butadiene rubber (NBR)
- Natural rubber (NR)
- Silicone rubber (SIR)
- Fluororubber (FPM)
- Ethylene propylene diene rubber (EPDM)
- Polyurethane (PUR)
- Chloroprene rubber (CR)

colors: black, white, grey, transparent, yellow

without suspension bolt
flat suction cup assembly



Standard
- seal removeable
- seal replaceable
- by means of clamping clip



Pressmaster
- seal removeable
- seal replaceable
- to overlay/roll-on
- residual stress/tension

without suspension

with suspension bolt
rigid

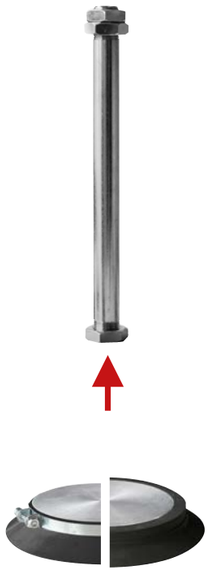

- Suspension bolt immobile
- vacuum flow in the centre

A-P suspension

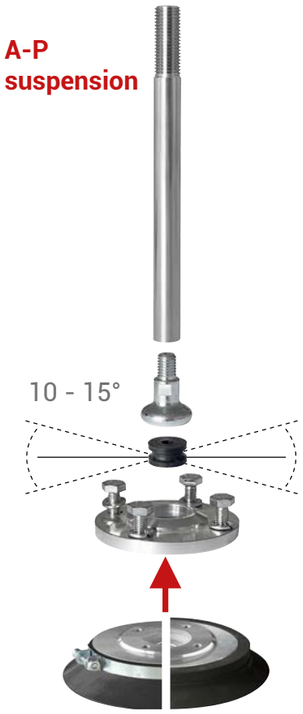

- Suspension bolt 10 - 15° movable
- vacuum flow in the centre

R-K suspension

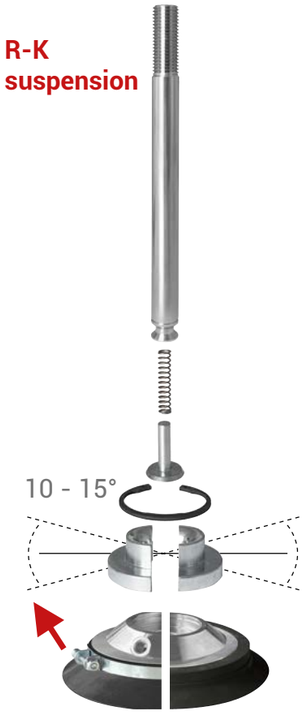

- Suspension bolt 10 - 15° movable
- vacuum flow on the side

Flat suction cup
with connecting nipple



BSC 32 A
with connecting nipple mushroom head version



BSC W
with connecting nipple for pushing through



Bellows suction cups
with 1,5; 2,5; 3,5 folds, with or without base plate or connecting nipple



BSC E
with connecting nipple with patented holder



BBSC P
with base plate secures with a clamping clip



Components

Area gripper



Valves

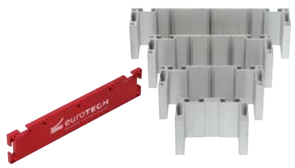

Profiles

eT-Gripper
suitable for the following surfaces:

- smooth
- rough sawn
- uneven
- wavy
- with cracks
- with knotholes
- lumber and construction lumber
- planed, glued and plate goods
- pallets and box parts
- plates made of metal, ceramic, plastic or stone

A distinction is made between:

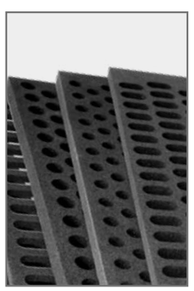

Suction mat

... if the loads to be lifted are **strong structured**, **rough sawn** or **porous**



Suction carpet

...if the loads to be lifted **aren't structured**, **thin** or are **unstable**

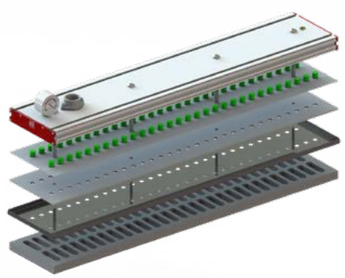

Additional acessories





MTC suction plate covers
protect sensitive surfaces

Cross clamping pieces, hoses, valves and more accessories





Vacuum generators

Pumps





Dry running vacuum pumps



Oil circulation lubricated vacuum pumps

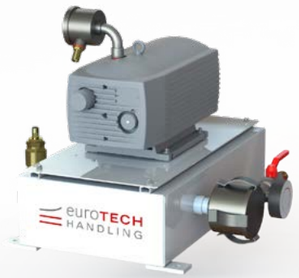

Energy units



Ejectors



Side channel blower



Lifting devices

They all have the same goal: to make lifting loads easier and increase process efficiency. Because the transport of heavy or unwieldly loads from A to B in a safe and efficient way is a challenge. We master these lifting device challenge every day for our customers.

Vacuum lifters

eT-Hover

- for safe and ergonomic lifting of a wide range of loads
- Series devices are available for simple to complex applications
- customer-specific adjustments possible
- load capacity depending on model

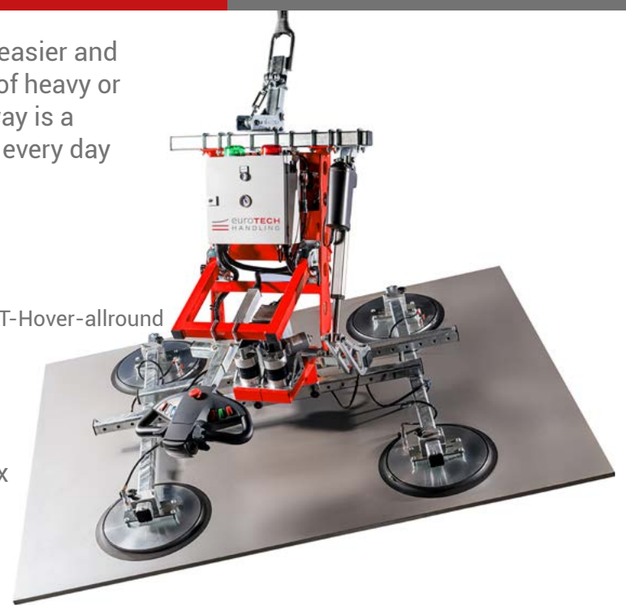

eT-Hover-allround

MOVEMENT OPTIONS:

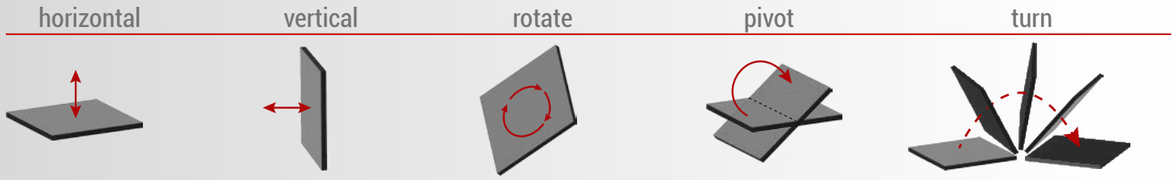



eT-Hover-univac line



eT-Hover-loop

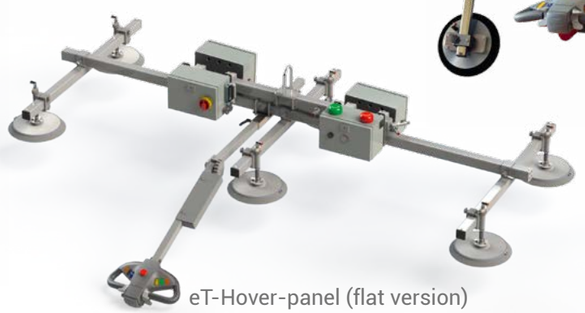

eT-Hover-panel (flat version)

VIDEO

Mounting attachment for mobile vehicles

eT-Litocran700 (the „red gazelle“)

Our add-on module for telehandlers and loading cranes makes window and facade installation easier.

The eT-Litocran700 is an autonomous add-on module that includes our “eT-Hover-univac” vacuum lifting device and a telescopic arm, which can perform 360 degree movements. The load capacity is designed for 700 kg. The module comes with its own power and hydraulic supply and its own remote control makes the device independent and flexible. It can be attached to both a telescopic handler and a crane.

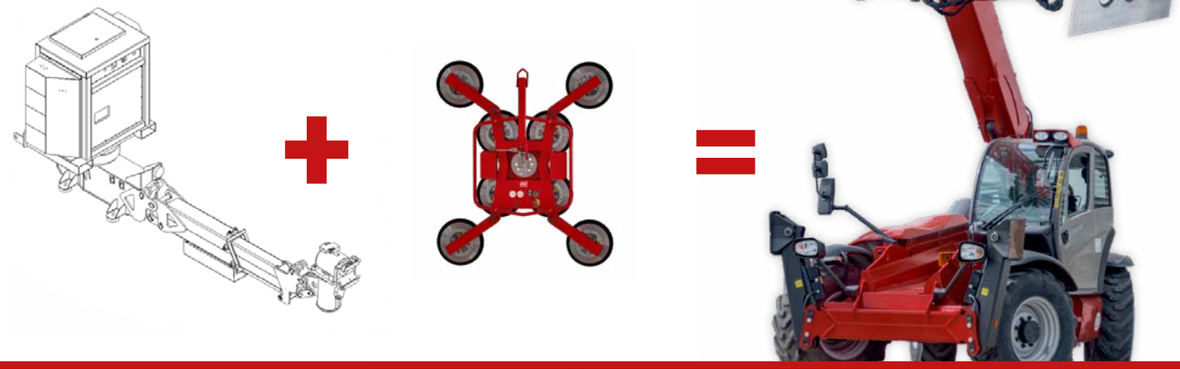



VIDEO

Lifting devices – application examples


Stone slab handling with the eT-Hover-allround


Lifting device for the glass industry


Curved glass hoist


Window installation with eT-Hover-univac


Glass handling with eT-Hover-allround


Lifting device for extremely large glass panes

Bild: sedak GmbH & Co. KG


Complicated window installation with eT-Litocran700


180°-turn of metal profiles with eT-Hover-loop



Automation with Cobot-Lift


Vacuum lifter for large sheet metal plates


Easy to handle with portable vacuum grabber


Cardboard handling with tube lifter


Plate handling with tube lifter eT-Lift


180° flipping of checkered plates

Plant engineering

Everything starts with an idea

We are your competent partner for all handling solutions.

Our well-rehearsed team accompanies you from the initial idea to the commissioning of a system, ensuring that all processes mesh perfectly. We check our customers‘ wishes for feasibility and use our experience to ensure the optimal design. Once we have the concept, we start implementing it. Our customers benefit from the proven euroTECH team approach:

From the practice for the practice!
We are always at your side with advice and support.



eT-Matic

- loading / feeding systems
- stacking systems
- order picking systems
- partially and fully automatic systems
- hoists and chassis
- suction frames
- modernization of existing systems
- all from a single source:
  - ✓ steel construction
  - ✓ vacuum technology
  - ✓ control technology

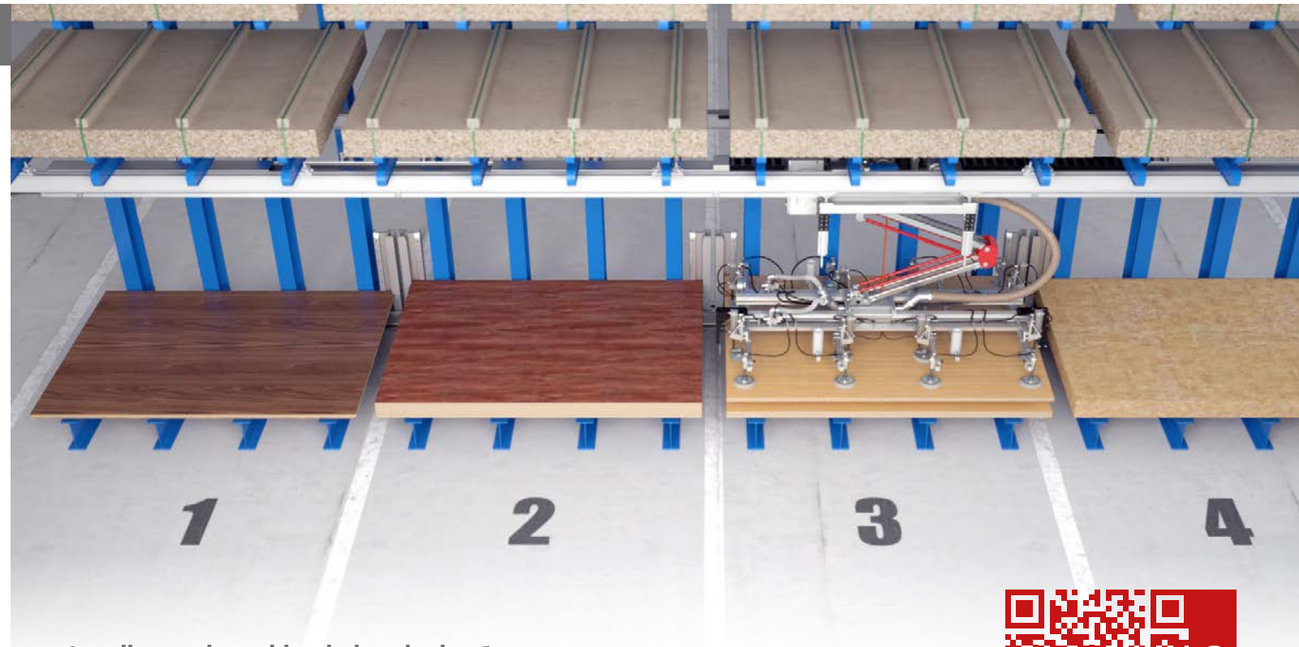

Loading and stacking in batch size 1

Thanks to our high level of vertical integration and assembly capacity, we react quickly to your requirements and therefore have a high level of delivery readiness.

VIDEO

Suction frames

Size of suction frames and type of vacuum components can be individually adapted to customer requirements.

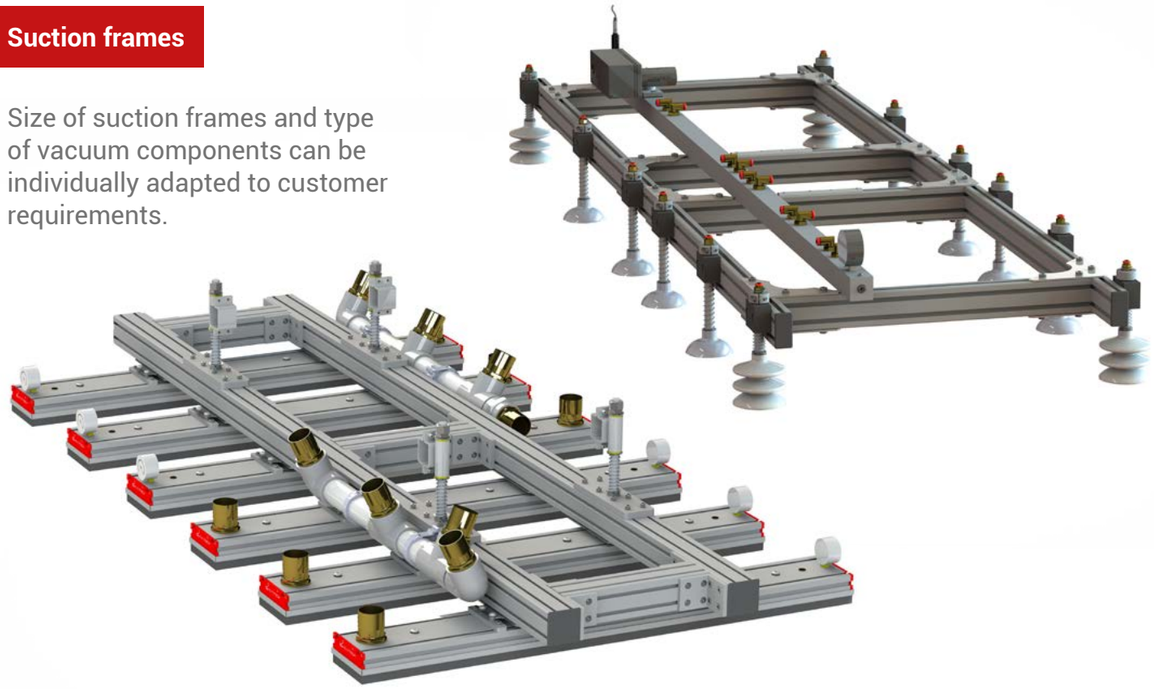



VIDEO

Plant engineering

eT-Sol | Solar testing devices

On your modules, ready, go!
Solar panels make an important contribution to the energy transition. Solar modules will be mounted in an exposed location and need to withstand many environmental impacts. Wind, ice, snow, and hail can be especially challenging and put the modules to a serious test. To avoid unpleasant surprises the euroTECH bench test reliably simulates such environmental scenarios using well-defined forces, cycles, and times.

The special properties of the euroTECH test bench are:

- Possible test forces by far exceed the standard IEC 61215-2:2021 + IEC 62782:2016
- Frequency up to 4Hz (standard 1Hz) meaning up to 240 pull/press times per min.
- Independent of external testing procedures and certification authorities
- Individual test and simulation procedures for mechanical loads, e.g. snow and wind load
- Possible material savings during product development
- Precise representation of the test values for complete documentation
- Data export to csv for Labview
- Shortening of the solar module development process

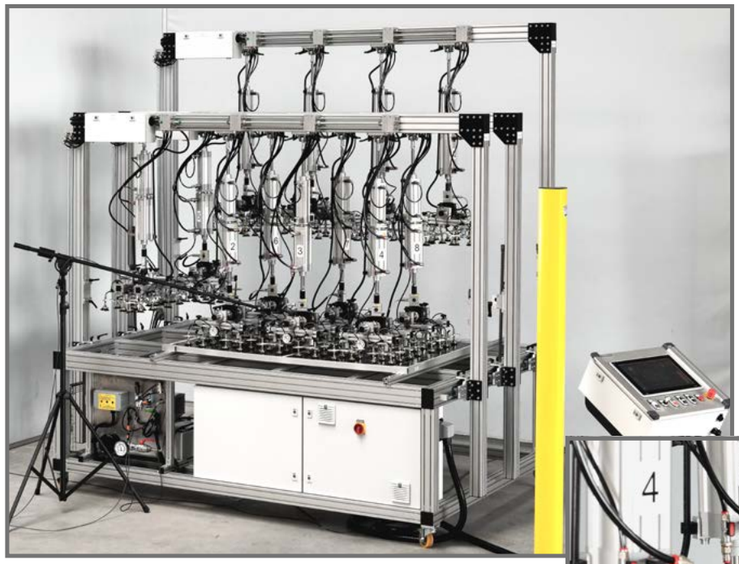

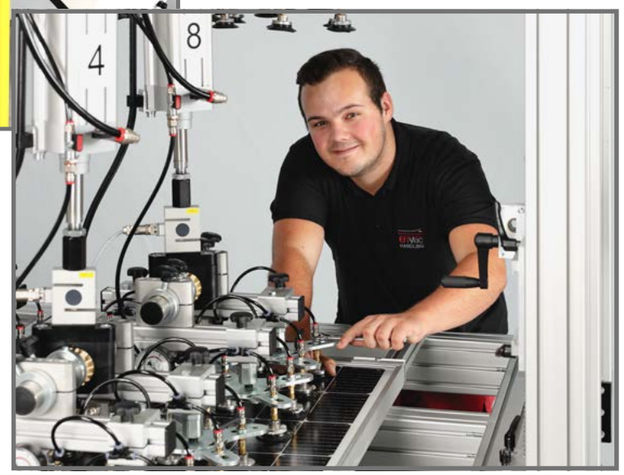

VIDEO



How resilient are SOLAR COLLECTORS in extreme cases?

e.g. in

storm snow hail frost



Plant engineering – application examples


Partial automation with eT-Gripper area grippers

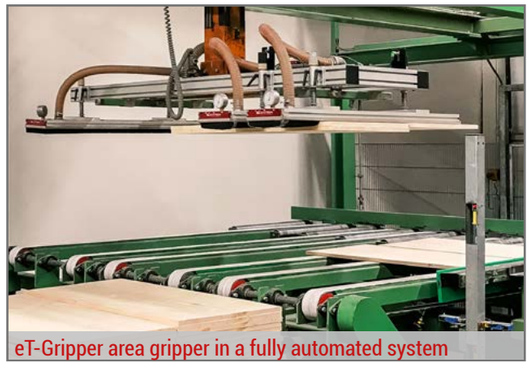
eT-Gripper area gripper in a fully automated system


Automated wood panel handling with suction frame


Pivotable handling unit

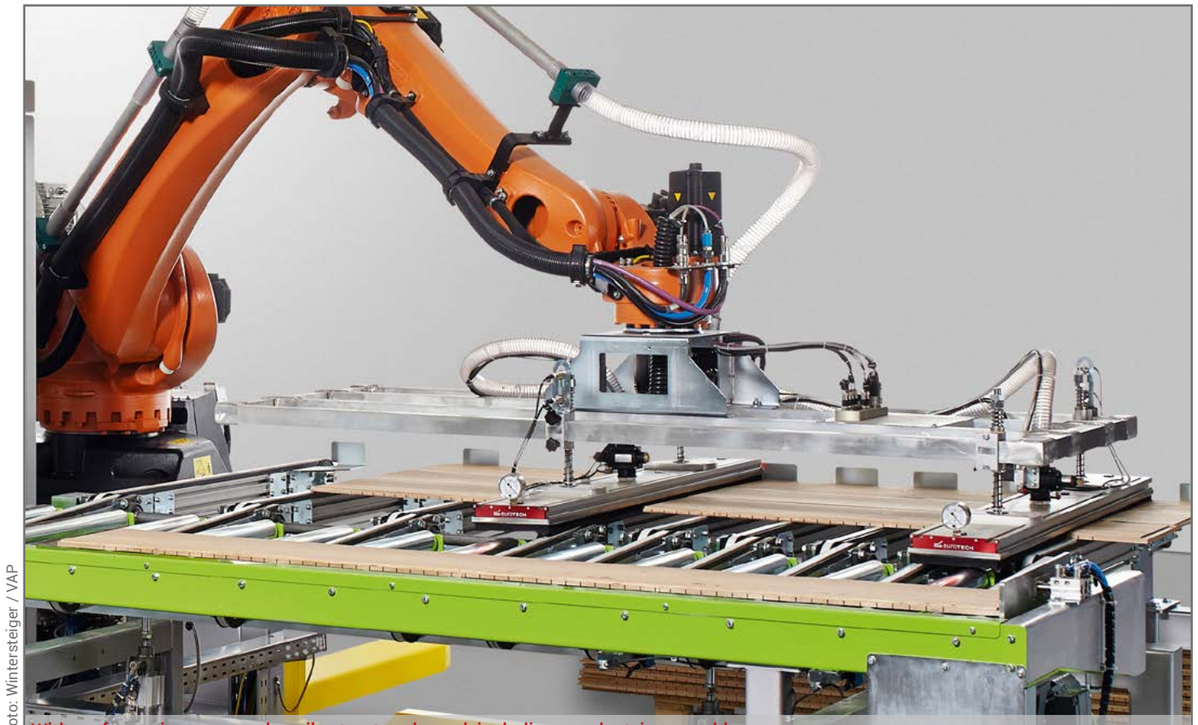
Photo: Wintersteiger / VAP

With surface grippers, even heavily structured wood, including sawdust, is no problem

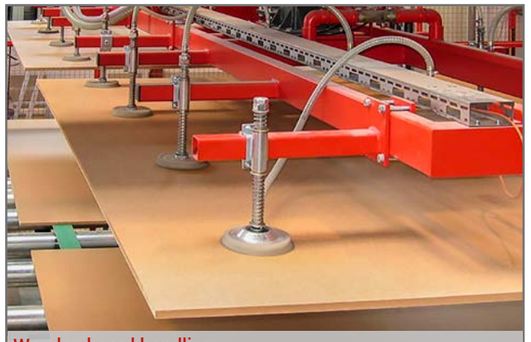
Wooden board handling

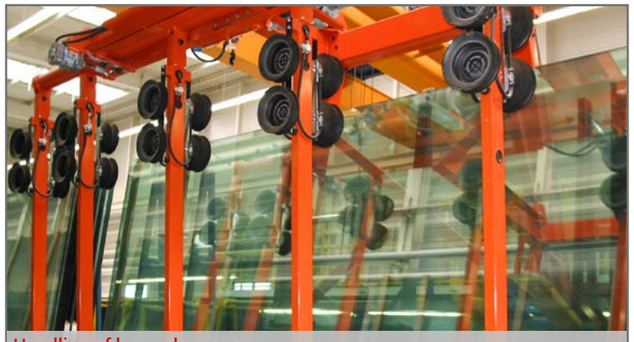
Handling of large glass panes


Feeding system for sheet metal plates

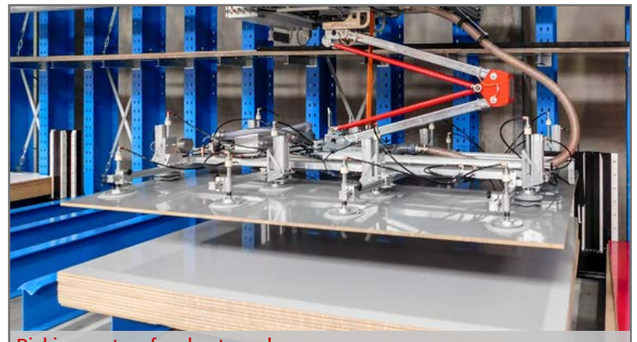
Picking system for sheet goods


Detail suction frame


Board picking system


Photo: Wintersteiger / VAP

Automation with surface grippers


Order picking of furniture pieces

Service

The wealth of possibilities in handling technology offers many solutions for you as a customer. We offer you results, regardless of whether it is a modification to a standard device or a completely customized system - euroTECH offers the optimal application for every individual case.

What wish do you have? Call us today because we are not just a vacuum technology supplier: we are your team of experts and the first choice when it comes to efficient and customer-oriented solutions.

Customer service



Our competent team of our own area sales managers guarantees customer proximity and is your link between our development team and you.
We will work with you to develop the best possible solution for your handling problem.

Furthermore, you will receive expert customer service on site from our team consisting of our own service employees.

We also offer you full service from a single source when it comes to plant engineering and automation. Until the system is finished, your project also goes through every further preliminary stage in-house: from construction, mechanics to electrical systems.

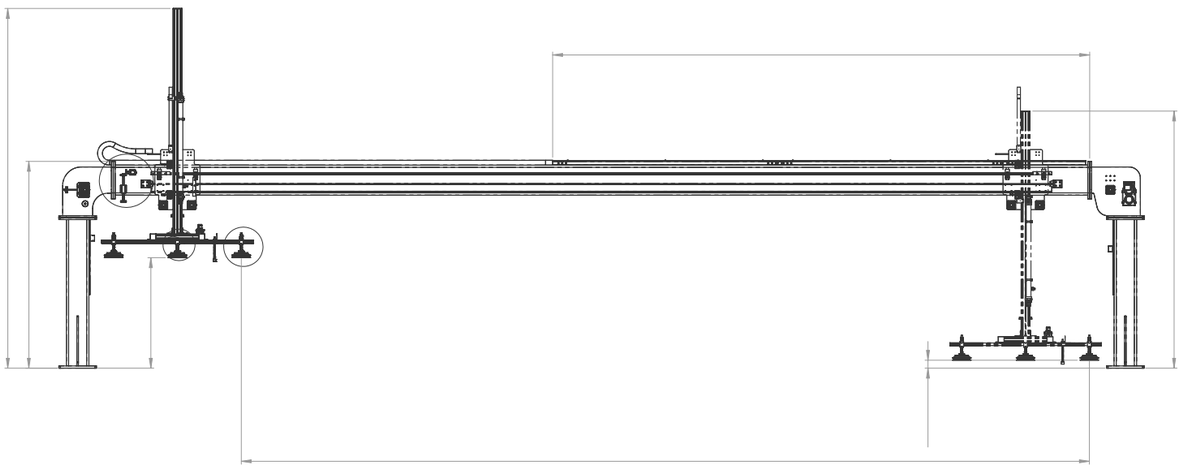

Factory overhaul



Our lifting equipment overhaul service provides a cost-effective solution to improve the performance and safety of your machines.

Rely on our experienced team to support you by professionally overhauling your lifting equipment, guaranteeing you extended service life and perfect operating conditions.

Support

If you have any questions or problems, our internal hotline offers quick help.
The after-sale service will keep you there still in good hands after the order has been completed.

+49 7428 93912 - 0



Service

UVV acceptance

for devices and systems from all manufacturers



The accident prevention regulations (UVV) represent binding obligations for every company and every insured person with statutory accident insurance regarding occupational safety and health protection at the workplace.

One of these obligations is the **annual UVV inspection of lifting devices and load handling equipment**.

Regular maintenance not only extends the lifespan of your systems, but also protects you from unplanned and costly downtime. You also increase operational safety and thus prevent industrial accidents.
Our experienced specialists check your system based on all legal requirements and regulations.

Your advantages as a customer of euroTECH:

- Many years of experience in the areas of: vacuum lifting technology, components, mechanical engineering
- All UVV approvals with a test report and approval for 1 year with a safety sticker
  - Vacuum lifting devices according to DIN EN 13155
  - Small cranes, column slewing cranes according to BGVD6
- Smaller repairs lasting up to 15 minutes are included in the price[1]
- Acceptance directly on site

All from a single source

- Help with problem solving and repairs
- Commissioning and maintenance of lifting devices
- Support in troubleshooting
  Optimization of various lifting devices



1) Spare parts are charged according to the spare parts prices.
Larger expenses by arrangement.
The price does not include any necessary work platform.
Repairs will be carried out against proof and expense calculation.
Our current price list applies.

Rental

Do you have a tight schedule for installing a window or facade and also have an installation challenge at a height of 20 m (65 ft) ?

No problem for you – call us and borrow from our extensive range
Handling offer selects the right device.

